# Model UF V 500 | Ultra-low temperature freezers with climate-neutral refrigerants

**The BINDER ultra low temperature freezer ensures the safe storage of samples at -90 °C. It combines outstanding environmental friendliness with low energy consumption, convenient operation and an individual safety concept.**

## BENEFITS

- Lowest energy consumption in its class
- Environmentally-friendly refrigerants R-290 and R-170
- Thermal insulation with unique long-life VIPs (vacuum insulation panels)
- Rust-proof interior made completely of stainless steel




Model 500



Model 500

## IMPORTANT FEATURES

- Temperature range: -90 °C to -40 °C
- Lowest energy consumption in its class
- Energy Star certified (depending on version)
- Powerful cascade compressor cooling unit
- Environmentally friendly refrigerants R-290 and R-170
- Thermal insulation with unique long-life VIPs (vacuum insulation panels)
- Innovative door gasket concept reduces buildup of ice
- Ergonomic door handle
- Rust-proof interior made completely of stainless steel
- Detachable inner doors made of stainless steel
- 3 stainless-steel shelves providing flexible placement
- Water cooling (depending on version)
- Zero-voltage alarm contact for in-house alarm system
- Internal data logger, measured values can be read out in open format via USB
- Ethernet interface
- 3 access ports, Ø 28 mm, rear

## ORDERING INFORMATION

| Interior volume | | Power supply - unit fuse | Plug* | Version | Model version | Art.-No. |
|---|---|---|---|---|---|---|
| [cu.ft.] | [L] | | | | | |
| **Model UF V 500** | | | | | | |
| 18 | 501 | 230 V 1~ 50 Hz -10,0 A | CEE 7/7 | Standard | UFV500-230V | 9020-0347 |
| | | | | Water cooling | UFV500-230V-W | 9020-0349 |
| | | 115 V 1~ 60 Hz -15,0 A | NEMA 5-15 | Standard | UFV500UL-120V | 9020-0351 |
| | | 208...230 V 2~ 60 Hz -10,0 A | NEMA 6-15 | Standard | UFV500UL-240V | 9020-0353 |

## TECHNICAL DATA

| Data | | | | |
|---|---|---|---|---|
| Article Number | 9020-0347 | 9020-0349 | 9020-0353 | 9020-0351 |
| Designation | UFV500-230V | UFV500-230V-W | UFV500UL-240V | UFV500UL-120V |
| Option model | Standard | Water cooling | Standard | Standard |
| **Performance Data Temperature** | | | | |
| Temperature range | -90...-40 °C | -90...-40 °C | -90...-40 °C | -90...-40 °C |
| Temperature uniformity at -80°C | 2.5 ± K | 2.5 ± K | 2.5 ± K | 2.5 ± K |
| Temperature fluctuation at -80°C | 1.5 ± K | 1.5 ± K | 1.5 ± K | 1.5 ± K |
| Cooling down time from 22°C to -80°C | 360 min | 360 min | 360 min | 360 min |
| **Electrical data** | | | | |
| Rated Voltage | 230 V | 230 V | 208...230 V | 115 V |
| Power frequency | 50 Hz | 50 Hz | 60 Hz | 60 Hz |
| Nominal power | 1,6 kW | 1,6 kW | 1,8 kW | 1,4 kW |
| Unit fuse | 10,0 A | 10,0 A | 10,0 A | 15,0 A |
| Phase (Nominal voltage) | 1~ | 1~ | 2~ | 1~ |
| **Dimensions and weights** | | | | |
| Interior volume | 18 cu.ft. | 18 cu.ft. | 18 cu.ft. | 18 cu.ft. |
| Net weight of the unit (empty) | 545 lbs | 545 lbs | 545 lbs | 545 lbs |
| Permitted load of individual compartment | 110 lbs | 110 lbs | 110 lbs | 110 lbs |
| Permitted load | 441 lbs | 441 lbs | 441 lbs | 441 lbs |
| Wall clearance back | 3,94 in | 3,94 in | 3,94 in | 3,94 in |
| Wall clearance sidewise | 9,84 in | 9,84 in | 9,84 in | 9,84 in |
| **Housing dimensions not incl. fittings and connections** | | | | |
| Width net | 32.52 in | 32.52 in | 32.52 in | 32.52 in |
| Height net | 77.4 in | 77.4 in | 77.4 in | 77.4 in |
| Depth net | 36.93 in | 36.93 in | 36.93 in | 36.93 in |
| **Internal Dimensions** | | | | |
| Interior width | 23.86 in | 23.86 in | 23.86 in | 23.86 in |
| Interior height | 51.18 in | 51.18 in | 51.18 in | 51.18 in |

| | | | | |
|---|---|---|---|---|
| Interior depth | 25.04 in | 25.04 in | 25.04 in | 25.04 in |
| Inner doors | 2 | 2 | 2 | 2 |
| Unit doors | 1 | 1 | 1 | 1 |
| **Environment-specific data** | | | | |
| Sound-pressure level | 47 dB(A) | 47 dB(A) | 47 dB(A) | 47 dB(A) |
| Average heat compensation at set value -80°C and Ta = 21°C | 330 W | 330 W | 330 W | 330 W |
| Energieverbrauch bei Sollwert -80 °C und $T_u$ = 20 °C | 7.9 kWh/d | 7.9 kWh/d | 7.9 kWh/d | 7.9 kWh/d |
| **Fixtures** | | | | |
| Number of shelves (std./max.) | 3/11 | 3/11 | 3/11 | 3/11 |
| **Load-variants** | | | | |
| Freezer racks per compartment | 4 | 4 | 4 | 4 |
| Cryoboxes, 50 mm | 352 | 352 | 352 | 352 |

All technical data is specified for unloaded units with standard equipment at an ambient temperature of +22 °C ±3 °C and a power supply voltage fluctuation of ±10%. The temperature data is determined in accordance to BINDER factory standard following DIN 12880, observing the recommended wall clearances of 10 % of the height, width, and depth of the inner chamber. All indications are average values, typical for units produced in series. We reserve the right to change technical specifications at any time.

## DIMENSIONS Incl. fittings and connections [mm]

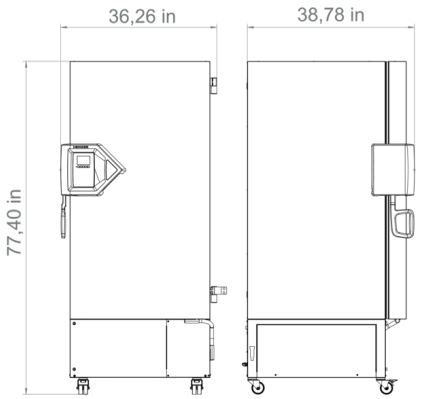

## DIAGRAMS

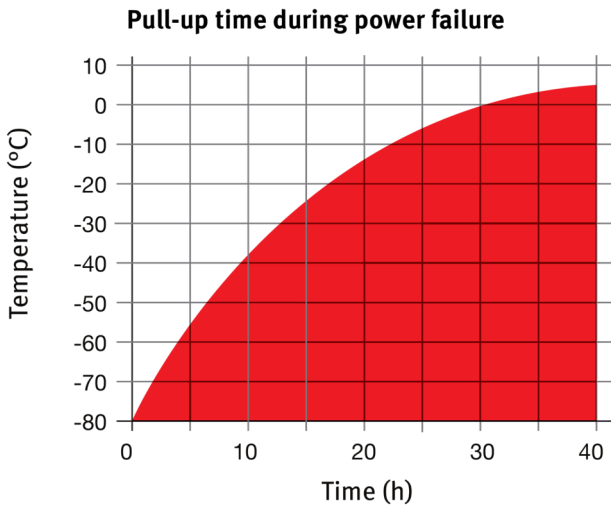


Ambient temperature 22 °C, no load

Heating up rate

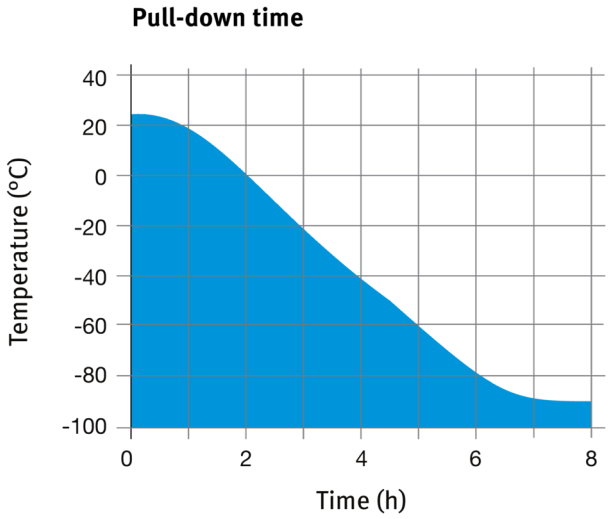


Ambient temperature 25 °C, no load

Cooling down rate

## OPTIONS

| Designation | Description | UF V 500 | * | Art.-No. |
|---|---|---|---|---|
| Alarm system, battery-backed | for maintaining temperature display, alarm messages, and communication | • | - | 8012-1910 |
| Analog output 4-20 mA | for temperature values (output not adjustable) | • | - | 8012-1898 |
| Buck-boost converter | automatic voltage compensation | • | - | 8012-1897 |
| Calibration certificate, expanded | for temperature; for extending the measurement in center of chamber to include another test temperature | • | - | 8012-1126 |
| Calibration certificate, temperature | for temperature, measurement in center of chamber at specified temperature | • | - | 8012-0031 |
| | temperature measurement incl. certificate, 20 measuring points at specified temperature | • | - | 8012-0925 |
| Compartment doors | Foam-filled compartment doors with gasket | • | - | 8012-1893 |
| $CO_2$ backup cooling | factory installed (allow for increased depth of UF V: 1085 mm), includes the option of a battery-backed alarm system | • | - | 8012-1891 |
| Door access system | consisting of electromechanical door locking mechanism and electronic access control via NumPad | • | - | 8012-1899 |
| Door lock | lockable door handle | • | - | 8012-1911 |
| Shipping pallet | with unloading ramp for installing unit without forklift | • | - | 8012-1906 |
| Switch cover | Lockable main switch cover | • | - | 8012-1980 |

## ACCESSORIES

| Designation | Description | UF V 500 | * | Art.-No. |
|---|---|---|---|---|
| 5 m power cable | C 13 refrigerator connection cable with BS 1363 British plug | • | - | 5023-0285 |
| | C 13 refrigerator connection cable with CEE 7/7 European plug | • | - | 5023-0283 |
| | C 13 refrigerator connection cable with type 13 Swiss plug | • | - | 5023-0284 |
| APT-COM™ 4 BASIC-Edition | for simple logging and documentation requirements with up to 5 networked units. | | | |
| | version 4, BASIC edition | • | - | 9053-0039 |
| APT-COM™ 4 GLP-Edition | for working under GLP-compliant conditions. Measured values are documented in a tamper-proof way in line with the requirements of FDA Regulation 21 CFR 11. | | | |
| | version 4, GLP edition | • | - | 9053-0042 |
| APT-COM™ 4 PROFESSIONAL-Edition | convenient unit and user management built on the BASIC edition. Suitable for networking up to 100 units. | | | |
| | version 4, PROFESSIONAL edition | • | - | 9053-0040 |
| Chamber rack, aluminum | for 5x4 standard boxes (50 mm), dimensions: H 278 x W 139 x D 564 mm | | | |
| | Set of 3 | • | - | 8012-2345 |
| | Set of 4 | • | - | 8012-2346 |
| | for 5x4 standard boxes (50 mm) incl. boxes, dimensions: H 278 x W 139 x D 564 mm | | | |
| | Set of 3 | • | - | 8012-2347 |
| | Set of 4 | • | - | 8012-2348 |
| | for 6x4 standard boxes (50 mm), dimensions: H 334 x W 139 x D 564 mm | | | |
| | Set of 3 | • | - | 8012-2357 |
| | Set of 4 | • | - | 8012-2358 |
| | for 6x4 standard boxes (50 mm) incl. boxes, dimensions: H 334 x W 139 x D 564 mm | | | |
| | Set of 3 | • | - | 8012-2359 |
| | Set of 4 | • | - | 8012-2360 |
| Chamber rack, stainless steel | for 5x4 standard boxes (50 mm), dimensions: H 278 x W 139 x D 561 mm | | | |
| | Set of 3 | • | - | 8012-2349 |
| | Set of 4 | • | - | 8012-2350 |
| | for 5x4 standard boxes (50 mm) incl. boxes, dimensions: H 278 x W 139 x D 561 mm | | | |
| | Set of 3 | • | - | 8012-2351 |

| Designation | Description | UF V 500 | * | Art.-No. |
|---|---|---|---|---|
| | Set of 4 | • | - | 8012-2352 |
| | for 6x4 standard boxes (50 mm), dimensions: H 334 x W 139 x D 561 mm | | | |
| | Set of 3 | • | - | 8012-2361 |
| | Set of 4 | • | - | 8012-2362 |
| | for 6x4 standard boxes (50 mm) incl. boxes, dimensions: H 334 x W 139 x D 561 mm | | | |
| | Set of 3 | • | - | 8012-2363 |
| | Set of 4 | • | - | 8012-2364 |
| Chamber rack with drawer, stainless steel | for 5x4 standard boxes (50 mm), dimensions: H 278 x W 140 x D 562 mm | | | |
| | Set of 3 | • | - | 8012-2353 |
| | Set of 4 | • | - | 8012-2354 |
| | for 5x4 standard boxes (50 mm) incl. boxes, dimensions: H 278 x W 140 x D 562 mm | | | |
| | Set of 3 | • | - | 8012-2355 |
| | Set of 4 | • | - | 8012-2356 |
| | for 6x4 standard boxes (50 mm), dimensions: H 334 x W 140 x D 562 mm | | | |
| | Set of 3 | • | - | 8012-2365 |
| | Set of 4 | • | - | 8012-2366 |
| | for 6x4 standard boxes (50 mm) incl. boxes, dimensions: H 334 x W 140 x D 562 mm | | | |
| | Set of 3 | • | - | 8012-2367 |
| | Set of 4 | • | - | 8012-2368 |
| Cryoboxes | set consisting of 36 cardboard boxes with sample dividers | • | - | 8012-2369 |
| Deicing kit | consisting of de-icing tray, wiper and scraper | • | - | 8012-1900 |
| Grid shelf | For temperature range -40 °C to -60 °C, 3 provided in set, including shelf supports | | | |
| | stainless steel | • | - | 8012-1903 |
| pH-neutral detergent | concentrated, for gentle remove of residual contaminants; 1 kg | • | - | 8012-2250 |
| Qualification documents IQ/OQ | IQ/OQ documents digital in PDF format – supporting documents for validation consisting of: IQ/OQ checklists, comprehensive unit documentation covering: temperature. Excluded: Document execution is separate | | | |
| | temperature. Excluded: Document execution is separate | • | - | 7057-0010 |

| Designation | Description | UF V 500 | * | Art.-No. |
|---|---|---|---|---|
| Qualification documents IQ/OQ/PQ | IQ/OQ/PQ documents digital in PDF format – supporting documents for validation customizied to customer requirements, PQ section added to the qualification folder IQ/OQ; supporting documents for validation consisting of: IQ/OQ checklists, comprehensive unit documentation covering: temperature values. Excluded: Document execution is separate | | | |
| | temperature values. Excluded: Document execution is separate | • | - | 7057-0016 |
| Shelf | Incl. shelf supports | | | |
| | stainless steel | • | - | 8012-1901 |

## SERVICES

| Designation | Description | * | Art.-No. |
|---|---|---|---|
| **Calibration services** | | | |
| Temperature calibration | Calibration of one (1) test temperature specified by the user in center of chamber, including certificate Travel to be quoted separate. | 05 | DL30-0190 |
| Temperature measurement, 20 measuring points | Temperature measurement with 20 measuring points with a set value specified by the user, including certificate | 05 | DL30-0620 |
| **Installation services** | | | |
| Unit installation | Connect the unit to the customer-side connections (electricity, water, wastewater, gas), basic functions check, brief operating instructions. (excl.: unpacking, setup, controller instructions, programming, installation work) Travel to be quoted as separate. | 05 | DL10-0170 |
| Unit instructions | Instruction regarding operating principle and basic functions of the unit, operation of the control electronics including programming. Travel to be quoted as separate Limited to 3 hours. | 05 | DL10-0540 |
| **Maintenance services** | | | |
| BRONZE 3-year maintenance contract | Annual Device Inspection Includes Preventive Maintenance with Calibration Certificate. 10% Discount on Spare Parts and Labor for any additional Services needed Wear + tear parts to be purchased or billed to customer. Travel to be quoted as separate. | 05 | DL20-0720 |
| GOLD 3-year maintenance contract | Annual Device Inspection Includes Preventive Maintenance with Calibration Certificate of Temperature. 25% Discount on Spare Parts and Labor for any additional Services needed. One additional courtesy visit per year can be used for service visit or operator. Wear + tear parts to be purchased or billed to customer. Travel to be quoted separate. | 05 | DL20-0955 |
| Preventive maintenance | One-off maintenance service in accordance with maintenance schedule. Visual inspection of mechanical and electrical components, testing of all key functions. Checking a test temperature specified by the user in center of usable space without certificate. Wear + tear parts need to be purchased or billed to customer. Travel to be quoted as separate. | 05 | DL20-0603 |
| SILVER 3-year maintenance contract | Annual Device Inspection Includes Preventive Maintenance with Calibration Certificate 15% Discount on Spare Parts and Labor for any additional Services needed One additional courtesy visit per year can be used for service visit or operator training. Wear + tear parts to be purchased or billed to customer. Travel to be quoted separate. | 05 | DL20-0855 |
| **Validation services** | | | |
| Execution of IQ/OQ | Execution of IQ/OQ in accordance with qualification folder. Travel to be quoted separate. | 05 | DL41-0210 |

| Designation | Description | * | Art.-No. |
|---|---|---|---|
| Execution of IQ/OQ/PQ | Execution of IQ/OQ/PQ in accordance with qualification folder. Travel to be quoted separate. | 05 | DL44-0500 |

## NOTES

05 Quoted prices do not include travel costs. Please refer to the chapter on BINDER Service for travel costs for your region. Quoted prices for services performed in Switzerland do not include a country-specific added fee (available on request).

**BINDER GmbH**
Tuttlingen, Germany
TEL +49 7462 2005 0
info@binder-world.com
www.binder-world.com

**BINDER Inc.**
Bohemia, NY, USA
TEL +1 631 224 4340
usa@binder-world.com
www.binder-world.us

**BINDER Environmental Testing Equipment (Shanghai) Co., Ltd.**
Shanghai, P.R. China
TEL +86 21 685 808 25
china@binder-world.com
www.binder-world.com