Model FP 720 | Drying and heating chambers with forced convection and program functions

A BINDER material test chamber with mechanical convection of the FP series provides reliably short drying times and particularly fast heating – even for chambers under full loads.

BENEFITS

- High temperature accuracy thanks to APT.line™ technology
- User-friendly controller with large display
- Computer interface: Ethernet
- Class 2 independent adjustable temperature safety device (DIN 12880) and class 3.1 independent temperature safety device (DIN 12880) with visual/ acoustic alarm available for selection on the controller



Model 720



Model 720

IMPORTANT FEATURES

- Temperature range: +12°C above ambient temperature up to +300°C
- High temperature accuracy thanks to APT.line™ technology
- Adjustable fan speed
- Controller with interval and real-time programming
- Electromechanical control of the exhaust air flap
- 2 chrome-plated racks
- Class 2 independent adjustable temperature safety device (DIN 12880) and class 3.1 independent temperature safety device (DIN 12880) with visual/ acoustic alarm available for selection on the controller
- Ergonomic handle design
- Computer interface: Ethernet
- Internal data logger, measured values can be read out in open format via USB

ORDERING INFORMATION

Interior volume		Power supply - unit fuse	Plug*	Version	Model version	Art.-No.
[cu.ft.]	[L]					
Model FP 720						
26	741	400 V 3~/N/PE 50/60 Hz -16,0 A	CEE 16 / 6 H plug 5-pin	Standard	FP720-400V	9010-0366
		208 V 3~ 60 Hz -16,0 A	NEMA L21-20	Standard	FP720UL-208V	9010-0370

TECHNICAL DATA

Data		
Article Number	9010-0366	9010-0370
Designation	FP720-400V	FP720UL-208V
Option model	Standard	Standard
Performance Data Temperature		
Temperature range	+12 °C above ambient temperature to 300 °C	+12 °C above ambient temperature to 300 °C
Temperature uniformity at 150°C	2.4 ± K	2.4 ± K
Temperature fluctuation at 150°C	0.6 ± K	0.6 ± K
Heating up time to 150°C	25 min	25 min
Recovery time after door was opened for 30 s at 150°C	6 min	6 min
Air change data		
Air change rate at 100°C	5 x/h	5 x/h
Electrical data		
Rated Voltage	400 V	208 V
Power frequency	50/60 Hz	60 Hz
Nominal power	4,5 kW	4,5 kW
Unit fuse	16,0 A	16,0 A
Phase (Nominal voltage)	3~/N/PE	3~
Dimensions and weights		
Interior volume	26 cu.ft.	26 cu.ft.
Net weight of the unit (empty)	366 lbs	366 lbs
Load per rack	99 lbs	99 lbs
Permitted load	694 lbs	694 lbs
Wall clearance back	6,3 in	6,3 in
Wall clearance sidewise	3,94 in	3,94 in
Housing dimensions not incl. fittings and connections		
Width net	45.67 in	45.67 in
Height net	62.6 in	62.6 in
Depth net	32.13 in	32.13 in
Internal Dimensions		

Interior width	39.37 in	39.37 in
Interior height	51.18 in	51.18 in
Interior depth	22.6 in	22.6 in
Unit doors	2	2
Environment-specific data		
Sound-pressure level	43 dB(A)	43 dB(A)
Energy consumption at 100°C	510 Wh/h	510 Wh/h
Energy consumption at 150°C	880 Wh/h	880 Wh/h
Fixtures		
Number of shelves (std./max.)	2/16	2/16

All technical data is specified for unloaded units with standard equipment at an ambient temperature of +22 °C ±3 °C and a power supply voltage fluctuation of ±10 %. The temperature data is determined in accordance to BINDER factory standard following DIN 12880, observing the recommended wall clearances of 10 % of the height, width, and depth of the inner chamber. Technical data refers to 100 % fan speed. All indications are average values, typical for units produced in series. We reserve the right to change technical specifications at any time.

DIMENSIONS Incl. fittings and connections [mm]

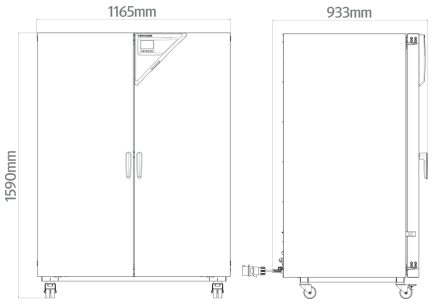

OPTIONS

Designation	Description	FP 720	*	Art.-No.
	left			
	10 mm	•	01	8012-2198
	30 mm	•	01	8012-2210
	50 mm	•	01	8012-2213
Access port with silicone plug	100 mm	•	01	8012-2207
	right			
	10 mm	•	01	8012-2206
	30 mm	•	01	8012-2212
	50 mm	•	01	8012-2215

Designation	Description	FP 720	*	Art.-No.
	100 mm	•	01	8012-2209
	top			
	10 mm	•	01	8012-2199
	30 mm	•	01	8012-2211
	50 mm	•	01	8012-2214
	100 mm	•	01	8012-2208
Analog output 4-20 mA	for temperature values (output not adjustable)	•	02	8012-2188
Calibration certificate, expanded	for temperature; for extending the measurement in center of chamber to include another test temperature	•	-	8012-2231
Calibration certificate, temperature	for temperature, measurement in center of chamber at specified temperature	•	-	8012-2227
	temperature measurement incl. certificate, 9 measuring points at specified temperature	•	-	8012-2230
	temperature measurement incl. certificate, 15- 18 measuring points at specified temperature	•	-	8012-2228
	temperature measurement incl. certificate and 27 measuring points at specified temperature	•	-	8012-2229
Door lock	lockable door handle	•	-	8012-2238
HEPA air filter	On fresh air supply for unit; filter classification H14 (acc. to. EN 1822-1:2009, > 99.995% at 0.3 µm); not in conjunction with reinforced heating output, reinforced fan	•	-	8012-2222
Inner chamber, reinforced	max. total load 350 kg	•	-	8012-2226
Interior lighting	with two 27 W light bulbs			
	400 V option model	•	-	8012-2191
Measurement of air exchange rate	in accordance with ASTM D5374, definition and protocol according to ambient temperature	•	-	8012-2232
Pt 100 temperature sensor	additional flexible Pt 100, interior, for displaying the temperature on the unit display	•	-	8012-2193

ACCESSORIES

Designation	Description	FP 720	*	Art.-No.
APT-COM™ 4 BASIC-Edition	for simple logging and documentation requirements with up to 5 networked units.			
	version 4, BASIC edition	•	-	9053-0039
APT-COM™ 4 GLP-Edition	for working under GLP-compliant conditions. Measured values are documented in a tamper-proof way in line with the requirements of FDA Regulation 21 CFR 11.			
	version 4, GLP edition	•	-	9053-0042

Designation	Description	FP 720	*	Art.-No.
APT-COM™ 4 PROFESSIONAL-Edition	convenient unit and user management built on the BASIC edition. Suitable for networking up to 100 units.			
	version 4, PROFESSIONAL edition	•	-	9053-0040
pH-neutral detergent	concentrated, for gentle remove of residual contaminants; 1 kg	•	-	8012-2250
Qualification documents IQ/OQ	IQ/OQ documents digital in PDF format – supporting documents for validation consisting of: IQ/OQ checklists, comprehensive unit documentation covering: temperature. Excluded: Document execution is separate			
	temperature. Excluded: Document execution is separate	•	-	7057-0010
Qualification documents IQ/OQ/PQ	IQ/OQ/PQ documents digital in PDF format – supporting documents for validation customizied to customer requirements, PQ section added to the qualification folder IQ/OQ; supporting documents for validation consisting of: IQ/OQ checklists, comprehensive unit documentation covering: temperature values. Excluded: Document execution is separate			
	temperature values. Excluded: Document execution is separate	•	-	7057-0016
Rack	max. load per rack 45 kg			
	chrome plated	•	-	8012-2044
	stainless steel	•	-	8012-2170
Rack, heavy load	max. load per rack 70 kg			
	Stainless steel	•	-	8012-2185
Rack accessories	fasteners (1 set of 4) for additional security of racks	•	-	8012-0531
Shelf, perforated	max. load per rack 40 kg			
	Stainless steel	•	-	8012-2178

SERVICES

Designation	Description	*	Art.-No.
Calibration services			
Temperature calibration	Calibration of one (1) test temperature specified by the user in center of chamber, including certificate Travel to be quoted separate.	05	DL30-0120
	Extension of calibration of one (1) additional test temperature specified by the user in the center of the usable space, including certificate Travel to be quoted separate.	05	DL30-0102
Temperature measurement, 9 measuring points	Temperature measurement with 9 measuring points with a set value specified by the user, including certificate. Travel to be quoted separate. A total of 3 shelves are required.	05	DL30-0109
Temperature measurement, 18 measuring points	Temperature measurement with 18 measuring points with a set value specified by the user, including certificate. Travel to be quoted separate. A total of 2 shelves are required.	05	DL30-0118

Designation	Description	*	Art.-No.
Temperature measurement, 27 measuring points	Temperature measurement with 27 measuring points with a set value specified by the user, including certificate. Travel to be quoted separate. A total of 3 shelves are required.	05	DL30-0127
Installation services			
Unit installation	Connect the unit to the customer-side connections (electricity, water, wastewater, gas), basic functions check, brief operating instructions. (excl.: unpacking, setup, controller instructions, programming, installation work) Travel to be quoted as separate.	05	DL10-0160
Unit instructions	Instruction regarding operating principle and basic functions of the unit, operation of the control electronics including programming. Travel to be quoted as separate Limited to 3 hours.	05	DL10-0550
Maintenance services			
BRONZE 3-year maintenance contract	Maintenance service as contractually agreed, visual inspection of mechanical and electrical components, check of control response, 20% discount on spare parts	05	DL20-0720
GOLD 3-year maintenance contract	Maintenance service as contractually agreed, visual inspection of mechanical and electrical components, check of control response, 20% discount on spare parts, testing of all key functions, replacement of wear parts, calibration of one test temperature specified by the user in the center of the usable space, including certificate	05	DL20-0910
Preventive maintenance	One-off maintenance service in accordance with maintenance schedule. Visual inspection of mechanical and electrical components, testing of all key functions. Checking a test temperature specified by the user in center of usable space without certificate. Wear + tear parts need to be purchased or billed to customer. Travel to be quoted as separate.	05	DL20-0602
SILVER 3-year maintenance contract	Maintenance service as contractually agreed, visual inspection of mechanical and electrical components, check of control response, 20% discount on spare parts, testing of all key functions, calibration of one test temperature specified by the user in the center of the usable space, without certificate	05	DL20-0810
Validation services			
Execution of IQ/OQ	Execution of IQ/OQ in accordance with qualification folder. Travel to be quoted separate.	05	DL41-0200
Execution of IQ/OQ/PQ	Execution of IQ/OQ/PQ in accordance with qualification folder. Travel to be quoted separate.	05	DL44-0500
Warranty service			
1-year warranty extension	The warranty is extended by 1 year from the delivery date, wear parts are excluded	05	DL50-0010

NOTES

01 Condensation may occur in the area around the access port. Access ports may be placed in custom locations for an additional charge.

02 UL mark is not granted when this option is used.

05 Quoted prices do not include travel costs. Please refer to the chapter on BINDER Service for travel costs for your region. Quoted prices for services performed in Switzerland do not include a country-specific added fee (available on request).

BINDER GmbH
Tuttlingen, Germany
TEL +49 7462 2005 0
info@binder-world.com
www.binder-world.com

BINDER Inc.
Bohemia, NY, USA
TEL +1 631 224 4340
usa@binder-world.com
www.binder-world.us

BINDER Environmental Testing Equipment (Shanghai) Co., Ltd.
Shanghai, P.R. China
TEL +86 21 685 808 25
china@binder-world.com
www.binder-world.com