Model FD 720 | Drying and heating chambers with forced convection

A BINDER FD series Avantgarde.Line heating oven is always used when fast drying and sterilization is required. Thanks to its fully homogeneous temperature distribution, quick dynamics and powerful fan, this heating oven saves valuable time.

BENEFITS

- Best energy efficiency on the market
- Excellent temporal and spatial temperature accuracy
- USB connection for recording data
- Temperature range up to +300 °C

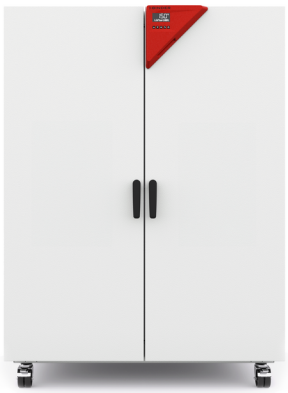

Model 720

IMPORTANT FEATURES

- Temperature range: +10°C above ambient temperature to +300 °C
- High temperature accuracy thanks to APT.line™ technology
- Forced convection
- Controller with LCD display
- Electromechanical control of the exhaust air flap
- 2 chrome-plated racks
- Units up to 115 L are stackable
- Class 2 independent temperature safety device (DIN 12880) with visual temperature alarm
- Ergonomic handle design
- USB port for recording data

ORDERING INFORMATION

Interior volume		Power supply - unit fuse	Plug*	Version	Model version	Art.-No.
[cu.ft.]	[L]					
Model FD 720						
26	741	400 V 3~/N/PE 50/60 Hz -16,0 A	CEE 16 / 6 H plug 5-pin	Standard	FD720-400V	9010-0311

TECHNICAL DATA

Data	
Article Number	9010-0311
Designation	FD720-400V
Option model	Standard
Performance Data Temperature	
Temperature range	+12 °C above ambient temperature to 300 °C
Temperature uniformity at 150°C	2.5 ± K
Temperature fluctuation at 150°C	0.6 ± K
Heating up time to 150°C	25 min
Recovery time after door was opened for 30 s at 150°C	6 min
Air change data	
Air change rate at 100°C	5 x/h
Electrical data	
Rated Voltage	400 V
Power frequency	50/60 Hz
Nominal power	4,5 kW
Unit fuse	16,0 A
Phase (Nominal voltage)	3~/N/PE
Dimensions and weights	
Interior volume	26 cu.ft.
Net weight of the unit (empty)	366 lbs
Load per rack	99 lbs
Permitted load	694 lbs
Wall clearance back	6,3 in
Wall clearance sidewise	3,94 in
Housing dimensions not incl. fittings and connections	
Width net	45.87 in
Height net	62.6 in
Depth net	34.25 in
Internal Dimensions	

Interior width	39.37 in
Interior height	51.18 in
Interior depth	22.44 in
Unit doors	2
Environment-specific data	
Sound-pressure level	43 dB(A)
Energy consumption at 100°C	480 Wh/h
Energy consumption at 150°C	800 Wh/h
Fixtures	
Number of shelves (std./max.)	2/16

All technical data is specified for unloaded units with standard equipment at an ambient temperature of +22 °C ±3 °C and a power supply voltage fluctuation of ±10 %. The temperature data is determined to BINDER factory standard following DIN 12880, observing the recommended wall clearances of 10 % of the height, width, and depth of the inner chamber. Technical data refers to 100 % fan speed. All indications are average values, typical for units produced in series. We reserve the right to change technical specifications at any time.

DIMENSIONS Incl. fittings and connections [mm]

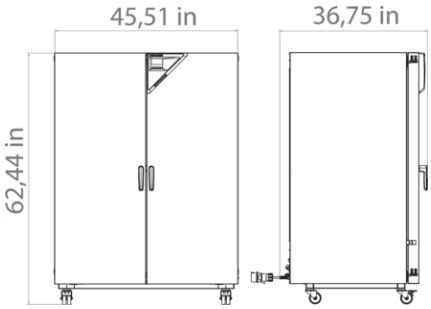

OPTIONS

Designation	Description	*	Art.-No.
	left		
	10 mm	01	8012-1276
	30 mm	01	8012-1016
	50 mm	01	8012-1020
Access port with silicone plug	100 mm	01	8012-1027
	right		
	10 mm	01	8012-1269
	30 mm	01	8012-1015
	50 mm	01	8012-1019

Designation	Description	*	Art.-No.
	100 mm	01	8012-1028
	top		
	10 mm	01	8012-1263
	30 mm	01	8012-1364
	50 mm	01	8012-1380
	100 mm	01	8012-1671
Alarm function for overheating	Switchable acoustic alarm, with adjustable limit value on the independent temperature safety device	-	8012-1636
Analog output 4-20 mA	for temperature values (output not adjustable)	02	8012-1624
Calibration certificate, expanded	for temperature; for extending the measurement in center of chamber to include another test temperature	-	8012-1116
Calibration certificate, temperature	for temperature, measurement in center of chamber at specified temperature	-	8012-1135
	temperature measurement incl. certificate, 9 measuring points at specified temperature	-	8012-1552
	temperature measurement incl. certificate, 15- 18 measuring points at specified temperature	-	8012-1573
	temperature measurement incl. certificate and 27 measuring points at specified temperature	-	8012-1594
Class 3.1 independent temperature safety device	with visual alarm (DIN 12880)	-	8012-1643
Clock	battery-backed	-	8012-1641
Door lock	lockable door handle	-	8012-1818
Ethernet interface	for Multi Management Software APT-COM™	-	8012-0989
Fan, reinforced	for increased air change rates, incl. uprated heat output for faster heating up time and improved recovery time; max. 300°C; not in conjunction with load management option		
	400 V option model	-	8012-1062
HEPA air filter	On fresh air supply for unit; filter classification H14 (acc. to. EN 1822-1:2009, > 99.995% at 0.3 µm); not in conjunction with reinforced heating output, reinforced fan	-	8012-1099
Inner chamber, reinforced	max. total load 350 kg	-	8012-1821
Interior lighting	with two 27 W light bulbs		
	400 V option model	-	8012-1825
Measurement of air exchange rate	in accordance with ASTM D5374, definition and protocol according to ambient temperature	-	8012-1195
Pt 100 temperature sensor	additional flexible Pt 100, interior, for displaying the temperature on the unit display	-	8012-1620
Viewing window and interior lighting	viewing window (triple insulating glass) in door, 300 x 480 mm, and 30 W interior lighting		

Designation	Description	*	Art.-No.
	400 V option model	-	8012-1831

ACCESSORIES

Designation	Description	*	Art.-No.
APT-COM™ 4 BASIC-Edition	for simple logging and documentation requirements with up to 5 networked units.		
	version 4, BASIC edition	-	9053-0039
APT-COM™ 4 GLP-Edition	for working under GLP-compliant conditions. Measured values are documented in a tamper-proof way in line with the requirements of FDA Regulation 21 CFR 11.		
	version 4, GLP edition	-	9053-0042
APT-COM™ 4 PROFESSIONAL-Edition	convenient unit and user management built on the BASIC edition. Suitable for networking up to 100 units.		
	version 4, PROFESSIONAL edition	-	9053-0040
pH-neutral detergent	concentrated, for gentle remove of residual contaminants; 1 kg	-	8012-2250
Qualification documents IQ/OQ	IQ/OQ documents digital in PDF format – supporting documents for validation consisting of: IQ/OQ checklists, comprehensive unit documentation covering: temperature. Excluded: Document execution is separate		
	temperature. Excluded: Document execution is separate	-	7057-0010
Qualification documents IQ/OQ/PQ	IQ/OQ/PQ documents digital in PDF format – supporting documents for validation customizied to customer requirements, PQ section added to the qualification folder IQ/OQ; supporting documents for validation consisting of: IQ/OQ checklists, comprehensive unit documentation covering: temperature values. Excluded: Document execution is separate		
	temperature values. Excluded: Document execution is separate	-	7057-0016
Rack	max. load per rack 45 kg		
	chrome plated	-	8012-2044
	stainless steel	-	8012-2170
Rack, heavy load	max. load per rack 70 kg		
	Stainless steel	-	8012-2185
Shelf, perforated	max. load per rack 40 kg		
	Stainless steel	-	8012-2178

SERVICES

Designation	Description	*	Art.-No.
Calibration services			
Temperature calibration	Calibration of one (1) test temperature specified by the user in center of chamber, including certificate Travel to be quoted separate.	05	DL30-0120

Designation	Description	*	Art.-No.
	Extension of calibration of one (1) additional test temperature specified by the user in the center of the usable space, including certificate Travel to be quoted separate.	05	DL30-0102
Temperature measurement, 9 measuring points	Temperature measurement with 9 measuring points with a set value specified by the user, including certificate. Travel to be quoted separate. A total of 3 shelves are required.	05	DL30-0109
Temperature measurement, 18 measuring points	Temperature measurement with 18 measuring points with a set value specified by the user, including certificate. Travel to be quoted separate. A total of 2 shelves are required.	05	DL30-0118
Temperature measurement, 27 measuring points	Temperature measurement with 27 measuring points with a set value specified by the user, including certificate. Travel to be quoted separate. A total of 3 shelves are required.	05	DL30-0127
Installation services			
Unit installation	Connect the unit to the customer-side connections (electricity, water, wastewater, gas), basic functions check, brief operating instructions. (excl.: unpacking, setup, controller instructions, programming, installation work) Travel to be quoted as separate.	05	DL10-0160
Unit instructions	Instruction regarding operating principle and basic functions of the unit, operation of the control electronics including programming. Travel to be quoted as separate Limited to 3 hours.	05	DL10-0540
Maintenance services			
BRONZE 3-year maintenance contract	Annual Device Inspection Includes Preventive Maintenance with Calibration Certificate. 10% Discount on Spare Parts and Labor for any additional Services needed Wear + tear parts to be purchased or billed to customer. Travel to be quoted as separate.	05	DL20-0720
GOLD 3-year maintenance contract	Annual Device Inspection Includes Preventive Maintenance with Calibration Certificate of Temperature. 25% Discount on Spare Parts and Labor for any additional Services needed. One additional courtesy visit per year can be used for service visit or operator. Wear + tear parts to be purchased or billed to customer. Travel to be quoted separate.	05	DL20-0910
Preventive maintenance	One-off maintenance service in accordance with maintenance schedule. Visual inspection of mechanical and electrical components, testing of all key functions. Checking a test temperature specified by the user in center of usable space without certificate. Wear + tear parts need to be purchased or billed to customer. Travel to be quoted as separate.	05	DL20-0602
SILVER 3-year maintenance contract	Annual Device Inspection Includes Preventive Maintenance with Calibration Certificate 15% Discount on Spare Parts and Labor for any additional Services needed One additional courtesy visit per year can be used for service visit or operator training. Wear + tear parts to be purchased or billed to customer. Travel to be quoted separate.	05	DL20-0810
Validation services			
Execution of IQ/OQ	Execution of IQ/OQ in accordance with qualification folder. Travel to be quoted separate.	05	DL40-0100
Execution of IQ/OQ/PQ	Execution of IQ/OQ/PQ in accordance with qualification folder. Travel to be quoted separate.	05	DL44-0500
Warranty service			
1-year warranty extension	The warranty is extended by 1 year from the delivery date, wear parts are excluded	05	DL50-0010

NOTES

01 Condensation may occur in the area around the access port. Access ports may be placed in custom locations for an additional charge.

02 UL mark is not granted when this option is used.

05 Quoted prices do not include travel costs. Please refer to the chapter on BINDER Service for travel costs for your region. Quoted prices for services performed in Switzerland do not include a country-specific added fee (available on request).

BINDER GmbH
Tuttlingen, Germany
TEL +49 7462 2005 0
info@binder-world.com
www.binder-world.com

BINDER Inc.
Bohemia, NY, USA
TEL +1 631 224 4340
usa@binder-world.com
www.binder-world.us

BINDER Environmental Testing Equipment (Shanghai) Co., Ltd.
Shanghai, P.R. China
TEL +86 21 685 808 25
china@binder-world.com
www.binder-world.com