Model MKF 240 | Dynamic climate chambers for rapid temperature changes with humidity control

A BINDER MKF series environmental simulation chamber is ideally suited for any cold and heat testing based on current temperature and climate testing methods according to DIN and IEC standards. The comprehensive standard equipment for this environmental simulation chamber ensures ease of operation.

BENEFITS

- Homogeneous climate conditions thanks to APT.line™ technology
- Automatic water and wastewater management
- Pressure humidification with fast response times
- Comprehensive programming and data acquisition
- Large heated viewing window

Model 240

Model 240

IMPORTANT FEATURES

- Temperature range: -40 °C to +180 °C
- Humidity range: 10 % to 98 % RH
- Integrated water-storage tank, 20 liters
- 4 zero-voltage relay contacts
- APT.line™ preheating chamber technology
- Programmable condensation protection for test material
- Heated viewing window with LED interior lighting
- Humidity regulation with capacitative humidity sensor and vapor humidification
- BINDER Multi Management Software APT-COM™ 4 Basic Edition
- Troubleshooting system with visual and audible alarms
- Intuitive touchscreen controller with time-segment and real-time programming
- Internal data logger, measured values can be read out in open format via USB
- Access port with silicone plug: 50 mm, left
- Class 2 independent adjustable temperature safety device (DIN 12880) with visual alarm
- 4 castors, two with brakes
- Computer interface: Ethernet
- Adjustable ramp function
- Integrated chart recorder
- Real-time clock
- Door heating
- Alarm notification in the event of insufficient water in fresh water tank
- 1 stainless steel rack
- Complete safety connection kit for water supply and drainage, up to 1 m height
- Inner chamber made of stainless steel
- CFC-free refrigerant R-452A
- Cooling with compressor cooling unit

OPTIONAL EQUIPMENT

- APT-COM Multi Management Software – for managing, recording, and documenting unit parameters
- Racks – option of stainless steel racks, depending on test requirements
- Systems for water treatment and compressed air supply
- Services – wide range of services to ensure that the unit functions correctly

ORDERING INFORMATION

Interior volume		Power supply - unit fuse	Plug*	Version	Model version	Art.-No.
[cu.ft.]	[L]					
Model MKF 240						
8	228	400 V 3~/N/PE 50 Hz -16,0 A	CEE 16 / 6 H plug 5-pin	Standard	MKF240-400V	9020-0380
		480 V 3~ 60 Hz -16,0 A	CEE 16 / 6 H plug 5-pin	Standard	MKF240-480V-C	9020-0358

TECHNICAL DATA

Data		
Article Number	9020-0380	9020-0358
Designation	MKF240-400V	MKF240-480V-C
Option model	Standard	Standard
Performance Data Temperature		
Temperature range	-40...180 °C	-40...180 °C
Temperature uniformity dependent on set value	0.1...1.5 ± K	0.1...1.5 ± K
Temperature fluctuation dependent on set value	0.1...0.5 ± K	0.1...0.5 ± K
Average heating-up rate according to IEC 60068-3-5 between -40°C and 180°C	5.0 K/min	5.0 K/min
Average cooling down time according to IEC 60068-3-5 between 180°C and -40°C	5.0 K/min	5.0 K/min
Cooling down time from 180°C to -40°C	120 min	120 min
Performance Data Climate		
Temperature range with humidity	10...95 °C	10...95 °C
Humidity range	10...98 % r.F.	10...98 % r.F.
Temperature fluctuation with humidity dependent on set value	0.1...1.3 ± K	0.1...1.3 ± K
Humidity fluctuation with humidity dependent on set value	≤2,5 ± % r.F.	≤2,5 ± % r.F.
Max. heat compensation at 25°C and 90% RH	400 W	400 W
Electrical data		
Rated Voltage	400 V	480 V
Power frequency	50 Hz	60 Hz
Nominal power	6,8 kW	6,8 kW
Unit fuse	16,0 A	16,0 A
Phase (Nominal voltage)	3~/N/PE	3~
Dimensions and weights		
Interior volume	8 cu.ft.	8 cu.ft.
Net weight of the unit (empty)	794 lbs	794 lbs
Load per rack	66 lbs	66 lbs
Permitted load	154 lbs	154 lbs

Wall clearance back	11,81 in	11,81 in
Wall clearance sidewise	7,87 in	7,87 in
Housing dimensions not incl. fittings and connections		
Width net	43.9 in	43.9 in
Height net	67.52 in	67.52 in
Depth net	36.42 in	36.42 in
Internal Dimensions		
Interior width	28.94 in	28.94 in
Interior height	27.56 in	27.56 in
Interior depth	17.44 in	17.44 in
Unit doors	1	1
Environment-specific data		
Sound-pressure level	65 dB(A)	67 dB(A)
Energy consumption at 25°C and 60% RH	1,500 Wh/h	1,500 Wh/h
Fixtures		
Number of shelves (std./max.)	1/6	1/6

All technical data is specified for unloaded units with standard equipment at an ambient temperature of +22 °C ±3 °C and a power supply voltage fluctuation of ±10 %. The temperature data is determined in accordance to BINDER factory standard following DIN 12880, observing the recommended wall clearances of 10 % of the height, width, and depth of the inner chamber. Technical data refers to 100 % fan speed. All indications are average values, typical for units produced in series. We reserve the right to change technical specifications at any time.

DIMENSIONS Incl. fittings and connections [mm]

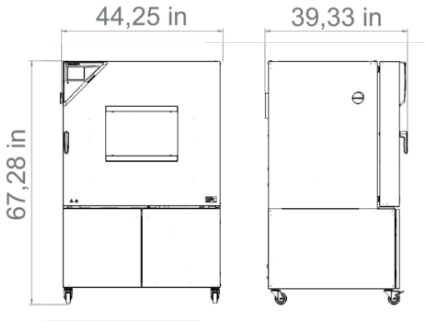

DIAGRAMS

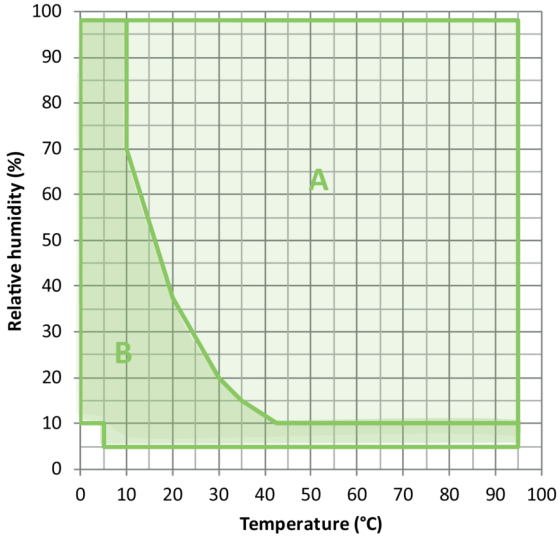

A: Standard Climate range
B: Expanded range with controlled dry-air purge

Climate chart

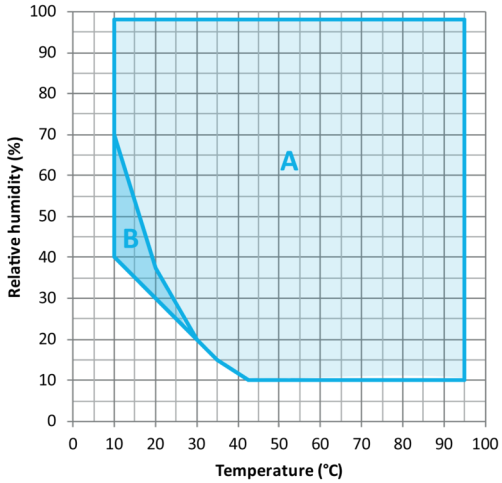

A: Standard Climate range
B: Time-limited operation (max. 24 hours)

Climate chart

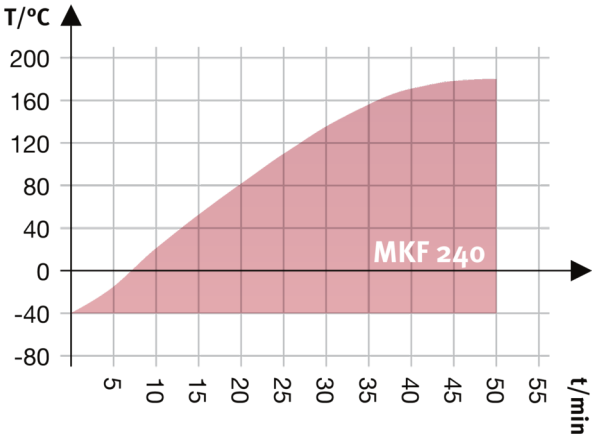

Heating up rate

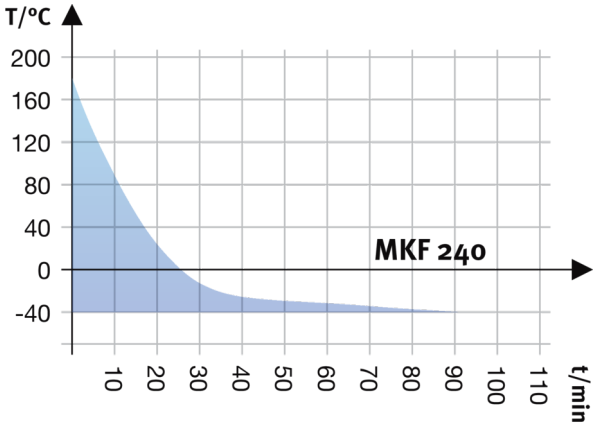

Cooling down rate

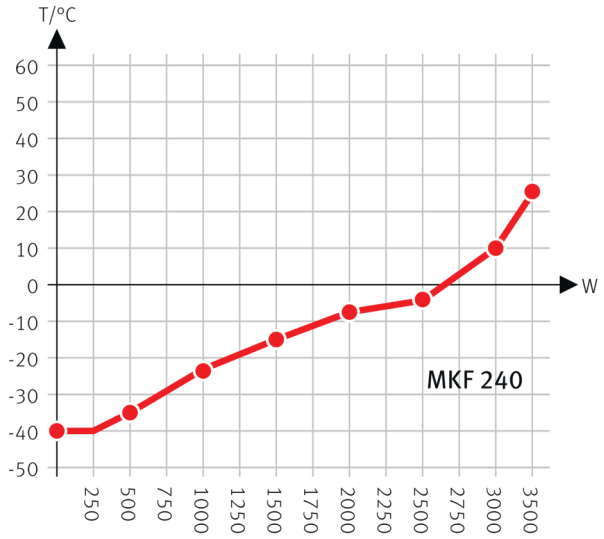

Heat compensation with a set value of -40°C

Heat compensation chart

OPTIONS

Designation	Description	MKF 240	*	Art.-No.
Access port with silicone plug	left			
	30 mm	•	01	8012-1323
	50 mm	•	01	8012-1329
	80 mm	•	01	8012-1335
	100 mm	•	01	8012-1543
	125 mm	•	01	8012-1352
	right			
	30 mm	•	01	8012-1320
	50 mm	•	01	8012-1326
	80 mm	•	01	8012-1332
	100 mm	•	01	8012-1540
	125 mm	•	01	8012-1349
	top			
	80 mm	•	01	8012-1537
	100 mm	•	01	8012-1531
	125 mm	•	01	8012-1534
Analog output 4-20 mA	for temperature and humidity values (output not adjustable)	•	-	8012-1085

Designation	Description	MKF 240	*	Art.-No.
Calibration certificate, expanded	for temperature and humidity; for extending the measurement in center of chamber to include another test value	•	-	8012-1194
Calibration certificate, temperature	temperature measurement incl. certificate, 9 measuring points at specified temperature	•	-	8012-1568
	temperature measurement incl. certificate, 15- 18 measuring points at specified temperature	•	-	8012-1589
	temperature measurement incl. certificate and 27 measuring points at specified temperature	•	-	8012-1609
Calibration certificate, temperature and humidity	Measurement in center of chamber at 25°C / 60% RH or at specified test values	•	-	8012-1188
	temperature (according to DIN12880) and humidity measurement incl. certificate, 27 temperature measuring points and 1 humidity measuring point, at 25 °C / 60 % RH or at specified values	•	-	8012-1615
Compressed air connection	for the connection to an existing pressurized air network	•	-	8012-1787
Door lock	lockable door handle	•	-	8012-1862
Dry-air purge	controlled, incl. connection; suitable for the simulation of current automobile industry standards	•	-	8012-1869
Notch-type access port	notch-type access port in door, 100 x 35 mm	•	-	8012-1856
Pt 100 temperature sensor	additional flexible Pt 100, interior, for displaying the temperature on the unit display	•	-	8012-1094
RS 485 interface, 2-wire	Additional serial interface can be used parallel to Ethernet, for Multi Management Software APT-COM™	•	-	8012-1769
Temperature safety device class 2	with visual alarm (DIN 12880)	•	-	8012-1864
Water circuit	allows condensed water to be reused	•	-	8012-1512
Water cooling	for reduced heat loss to ambient air	•	-	8012-0842

ACCESSORIES

Designation	Description	MKF 240	*	Art.-No.
APT-COM™ 4 GLP-Edition	for working under GLP-compliant conditions. Measured values are documented in a tamper-proof way in line with the requirements of FDA Regulation 21 CFR 11.			
	version 4, GLP edition	•	-	9053-0042
APT-COM™ 4 PROFESSIONAL-Edition	convenient unit and user management built on the BASIC edition. Suitable for networking up to 100 units.			
	version 4, PROFESSIONAL edition	•	-	9053-0040
BINDER PURE AQUA SERVICE	System for preparation or complete desalination of tap water, complete set containing PURE AQUA 300 single-use cartridge, measuring device, and all necessary connecting parts	•	-	8012-0759
BINDER PURE AQUA SERVICE, accessories	Single-use, replacement cartridge for BINDER PURE AQUA System	•	-	6011-0165

Designation	Description	MKF 240	*	Art.-No.
pH-neutral detergent	concentrated, for gentle remove of residual contaminants; 1 kg	•	-	8012-2250
Qualification documents IQ/OQ	IQ/OQ documents digital in PDF format – supporting documents for validation consisting of: IQ/OQ checklists, comprehensive unit documentation covering:			
	temperature and humidity. Excluded: Document execution is separate.	•	-	7057-0011
	IQ/OQ documents digital in PDF format – supporting documents for validation consisting of: IQ/OQ checklists, comprehensive unit documentation covering: temperature. Excluded: Document execution is separate			
	temperature. Excluded: Document execution is separate	•	-	7057-0010
Qualification documents IQ/OQ/PQ	IQ/OQ/PQ documents digital in PDF format – supporting documents for validation customizied to customer requirements, PQ section added to the qualification folder IQ/OQ; supporting documents for validation consisting of: IQ/OQ checklists, comprehensive unit documentation covering:			
	temperature and humidity values. Excluded: Document execution is separate.	•	-	7057-0017
	IQ/OQ/PQ documents digital in PDF format – supporting documents for validation customizied to customer requirements, PQ section added to the qualification folder IQ/OQ; supporting documents for validation consisting of: IQ/OQ checklists, comprehensive unit documentation covering: temperature values. Excluded: Document execution is separate			
	temperature values. Excluded: Document execution is separate	•	-	7057-0016
Rack	stainless steel	•	-	8012-2053
Rack, reinforced	stainless steel, with fasteners (1 set of 4)	•	-	8012-0605
Rack accessories	fasteners (1 set of 4) for additional security of racks	•	-	8012-2280
RS 485 / RS 422 interface converter	RS 422 cable set and RS 485 / RS 422 interface converter for connection to 10-way plug distributor			
	115 V option model	•	-	8012-0599
	230 V option model	•	-	8012-0589
Shelf, perforated	Stainless steel	•	-	8012-2251

SERVICES

Designation	Description	*	Art.-No.
Calibration services			
Temperature and humidity calibration	Expansion –Additional Temperature and humidity calibration with 1 measuring point in center of chamber with 1 specified pair of values, including certificate. Travel to be quoted separate.	05	DL30-0302
	Temperature and humidity calibration with 1 measuring point in center of chamber with 1 specified pair of values, including certificate. Travel to be quoted separate.	05	DL30-0330
Temperature measurement, 9 temperature measuring points and 1 humidity measuring point	Temperature measurement with 9 temperature measuring points and 1 humidity measuring point in center of chamber with a pair of values specified by the user, including certificate. Travel to be quoted separate. A total of 3 shelves are required.	05	DL30-0309

Designation	Description	*	Art.-No.
Temperature measurement, 18 temperature measuring points and 1 humidity measuring point	Temperature measurement with 18 temperature measuring points and 1 humidity measuring point in center of chamber with a pair of values specified by the user, including certificate. Travel to be quoted separate. A total of 2 shelves are required.	05	DL30-0318
Temperature measurement, 27 temperature measuring points and 1 humidity measuring point	Temperature measurement with 27 temperature measuring points and 1 humidity measuring point in center of chamber with a pair of values specified by the user, including certificate. Travel to be quoted separate. A total of 3 shelves are required.	05	DL30-0327
Installation services			
Unit installation	Connect the unit to the customer-side connections (electricity, water, wastewater, gas), basic functions check, brief operating instructions. (excl.: unpacking, setup, controller instructions, programming, installation work) Travel to be quoted as separate.	05	DL10-0180
Unit instructions	Instruction regarding operating principle and basic functions of the unit, operation of the control electronics including programming. Travel to be quoted as separate Limited to 3 hours.	05	DL10-0560
Maintenance services			
BRONZE 3-year maintenance contract	Annual Device Inspection Includes Preventive Maintenance with Calibration Certificate. 10% Discount on Spare Parts and Labor for any additional Services needed Wear + tear parts to be purchased or billed to customer. Travel to be quoted as separate.	05	DL20-0710
GOLD 3-year maintenance contract	Annual Device Inspection Includes Preventive Maintenance with Calibration Certificate of Temperature. 25% Discount on Spare Parts and Labor for any additional Services needed. One additional courtesy visit per year can be used for service visit or operator. Wear + tear parts to be purchased or billed to customer. Travel to be quoted separate.	05	DL20-0935
Preventive maintenance	One-off maintenance service in accordance with maintenance schedule. Visual inspection of mechanical and electrical components, testing of all key functions. Checking a test temperature specified by the user in center of usable space without certificate. Wear + tear parts need to be purchased or billed to customer. Travel to be quoted as separate.	05	DL20-0610
SILVER 3-year maintenance contract	Annual Device Inspection Includes Preventive Maintenance with Calibration Certificate 15% Discount on Spare Parts and Labor for any additional Services needed One additional courtesy visit per year can be used for service visit or operator training. Wear + tear parts to be purchased or billed to customer. Travel to be quoted separate.	05	DL20-0835
Validation services			
Execution of IQ/OQ	Execution of IQ/OQ in accordance with qualification folder. Travel to be quoted separate.	05	DL42-0300
Execution of IQ/OQ/PQ	Execution of IQ/OQ/PQ in accordance with qualification folder. Travel to be quoted separate.	05	DL44-0500
Warranty service			
1-year warranty extension	The warranty is extended by 1 year from the delivery date, wear parts are excluded	05	DL50-0040

NOTES

01 Condensation may occur in the area around the access port. Access ports may be placed in custom locations for an additional charge.

05 Quoted prices do not include travel costs. Please refer to the chapter on BINDER Service for travel costs for your region. Quoted prices for services performed in Switzerland do not include a country-specific added fee (available on request).

BINDER GmbH
Tuttlingen, Germany
TEL +49 7462 2005 0
info@binder-world.com
www.binder-world.com

BINDER Inc.
Bohemia, NY, USA
TEL +1 631 224 4340
usa@binder-world.com
www.binder-world.us

BINDER Environmental Testing Equipment (Shanghai) Co., Ltd.
Shanghai, P.R. China
TEL +86 21 685 808 25
china@binder-world.com
www.binder-world.com