Model MK 240 | Dynamic climate chambers for rapid temperature changes

The BINDER MK series chamber is suitable for all heat and cold tests between -40 °C and +180 °C. The MK is a clever alternative to complex individual solutions for cyclical temperature tests.

BENEFITS

- Homogeneous climate conditions thanks to APT.line™ technology
- Comprehensive programming and data acquisition
- Large heated viewing window



Model 240



Model 240

IMPORTANT FEATURES

- Temperature range: -40 °C to +180 °C
- APT.line™ preheating chamber technology
- Programmable condensation protection for test material
- Heated viewing window with LED interior lighting
- BINDER Multi Management Software APT-COM™ Basic Edition
- Troubleshooting system with visual and audible alarms
- Intuitive touchscreen controller with time-segment and real-time programming
- Internal data logger, measured values can be read out in open format via USB
- Access port with silicone plug, 50 mm, left
- Class 2 independent adjustable temperature safety device (DIN 12880) with visual alarm
- 4 castors, two with brakes
- Computer interface: Ethernet
- Adjustable ramp function
- Integrated chart recorder
- Real-time clock
- Door heating
- 1 stainless steel rack
- Inner chamber made of stainless steel
- CFC-free refrigerant R-452A
- Cooling with compressor cooling unit

OPTIONAL EQUIPMENT

- APT-COM Multi Management Software – for managing, recording, and documenting unit parameters
- Racks – option of stainless steel racks, depending on test requirements
- Compressed air supply system
- Services – wide range of services to ensure that the unit functions correctly

ORDERING INFORMATION

Interior volume [L]	Power supply - unit fuse	Plug*	Version	Model version	Art.-No.
Model MK 240					
228	400 V 3~/N/PE 50 Hz -16,0 A	CEE 16 / 6 H plug 5-pin	Standard	MK240-400V	9020-0376
	480 V 3~ 60 Hz -16,0 A	CEE 16 / 6 H plug 5-pin	with voltage and frequency converter	MK240-480V-C	9020-0355

TECHNICAL DATA

Data		
Article Number	9020-0376	9020-0355
Designation	MK240-400V	MK240-480V-C
Option model	Standard	with voltage and frequency converter
Performance Data Temperature		
Temperature range	-40...180 °C	-40...180 °C
Temperature uniformity dependent on set value	0.1...1.2 ± K	0.1...1.2 ± K
Temperature fluctuation dependent on set value	0.1...0.5 ± K	0.1...0.5 ± K
Average heating-up rate according to IEC 60068-3-5 between -40°C and 180°C	5.0 K/min	5.0 K/min
Average cooling down time according to IEC 60068-3-5 between 180°C and -40°C	4.5 K/min	4.5 K/min
Cooling down time from 180°C to -40°C	110 min	110 min
Electrical data		
Rated Voltage	400 V	480 V
Power frequency	50 Hz	60 Hz
Nominal power	5,6 kW	5,6 kW
Unit fuse	16,0 A	16,0 A
Phase (Nominal voltage)	3~/N/PE	3~
Dimensions and weights		
Interior volume	228 L	228 L
Net weight of the unit (empty)	321 kg	321 kg
Load per rack	30 kg	30 kg
Permitted load	70 kg	70 kg
Wall clearance back	300 mm	300 mm
Wall clearance sidewise	200 mm	200 mm
Housing dimensions not incl. fittings and connections		
Width net	1,115 mm	1,115 mm
Height net	1,710 mm	1,710 mm
Depth net	925 mm	925 mm
Internal Dimensions		

Interior width	735 mm	735 mm
Interior height	700 mm	700 mm
Interior depth	443 mm	443 mm
Unit doors	1	1
Environment-specific data		
Sound-pressure level	62 dB(A)	67 dB(A)
Energy consumption at 20°C	1,300 Wh/h	1,300 Wh/h
Fixtures		
Number of shelves (std./max.)	1/6	1/6

All technical data is specified for unloaded units with standard equipment at an ambient temperature of +22 °C ±3 °C and a power supply voltage fluctuation of ±10 %. The temperature data is determined in accordance to BINDER factory standard following DIN 12880, observing the recommended wall clearances of 10 % of the height, width, and depth of the inner chamber. Technical data refers to 100 % fan speed. All indications are average values, typical for units produced in series. We reserve the right to change technical specifications at any time.

DIMENSIONS Incl. fittings and connections [mm]

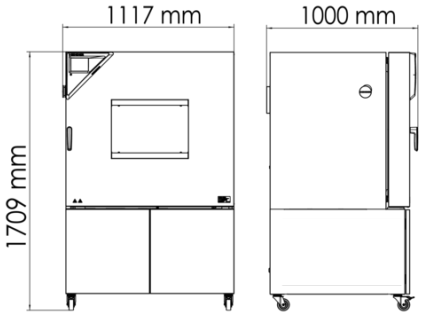

DIAGRAMS

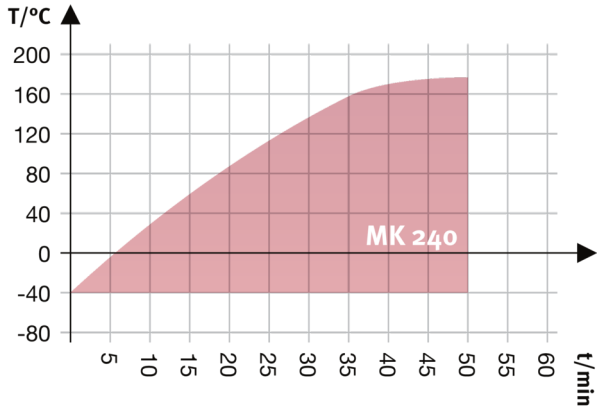

Heating up rate

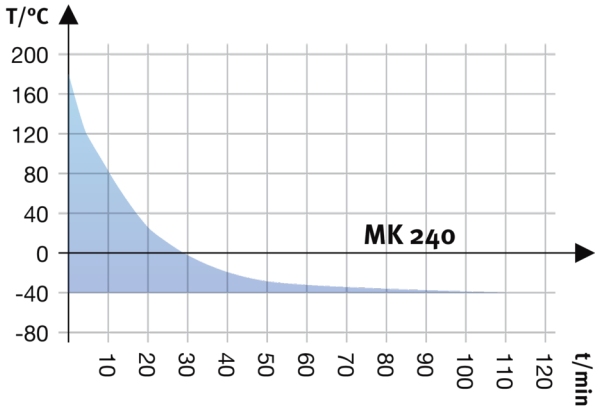

Cooling down rate

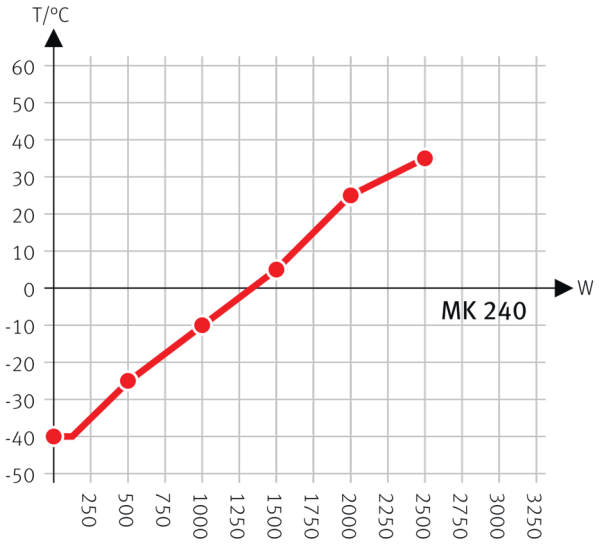

Heat compensation with a set value of -40°C

Heat compensation chart

OPTIONS

Designation	Description	MK 240	*	Art.-No.
Access port with silicone plug	left			
	30 mm	•	01	8012-1322
	50 mm	•	01	8012-1328
	80 mm	•	01	8012-1334
	100 mm	•	01	8012-1542
	125 mm	•	01	8012-1351
	right			
	30 mm	•	01	8012-1319

Designation	Description	MK 240	*	Art.-No.
	50 mm	•	01	8012-1325
	80 mm	•	01	8012-1331
	100 mm	•	01	8012-1539
	125 mm	•	01	8012-1348
	top			
	80 mm	•	01	8012-1536
	100 mm	•	01	8012-1530
	125 mm	•	01	8012-1533
Analog output 4-20 mA	for temperature values (output not adjustable)	•	-	8012-1084
Calibration certificate, expanded	for temperature; for extending the measurement in center of chamber to include another test temperature	•	-	8012-1124
Calibration certificate, temperature	for temperature, measurement in center of chamber at specified temperature	•	-	8012-1143
	temperature measurement incl. certificate, 9 measuring points at specified temperature	•	-	8012-1560
	temperature measurement incl. certificate, 15- 18 measuring points at specified temperature	•	-	8012-1581
	temperature measurement incl. certificate and 27 measuring points at specified temperature	•	-	8012-1602
Compressed air connection	for the connection to an existing pressurized air network	•	-	8012-1089
Door lock	lockable door handle	•	-	8012-1861
Dry-air purge	uncontrolled, incl. connection; for preventing condensation	•	-	8012-1865
Notch-type access port	notch-type access port in door, 100 x 35 mm	•	-	8012-1850
Pt 100 temperature sensor	additional flexible Pt 100, interior, for displaying the temperature on the unit display	•	-	8012-1093
RS 485 interface, 2-wire	Additional serial interface can be used parallel to Ethernet, for Multi Management Software APT-COM™	•	-	8012-1768
Temperature safety device class 2	with visual alarm (DIN 12880)	•	-	8012-1792
Zero voltage relay contacts	for controlling 3 relay contacts via program regulators, accessible via 6-pin DIN socket (max. 24 V - 2.5 A)	•	-	8012-1095

ACCESSORIES

Designation	Description	MK 240	*	Art.-No.
APT-COM™ 4 GLP-Edition	for working under GLP-compliant conditions. Measured values are documented in a tamper-proof way in line with the requirements of FDA Regulation 21 CFR 11.			

Designation	Description	MK 240	*	Art.-No.
	version 4, GLP edition	•	-	9053-0042
APT-COM™ 4 PROFESSIONAL-Edition	convenient unit and user management built on the BASIC edition. Suitable for networking up to 100 units.			
	version 4, PROFESSIONAL edition	•	-	9053-0040
pH-neutral detergent	concentrated, for gentle remove of residual contaminants; 1 kg	•	-	8012-2250
Qualification documents	IQ/OQ/PQ documents – supporting documents for validation performed by customers, according to customer requirements, PQ section added to qualification folder IQ/OQ; parameters: temperature, CO_2, O_2 – or pressure, depending on unit			
	Digital in PDF format	•	-	7057-0005
	Hard copy inside folder	•	-	7007-0005
	IQ/OQ documents – supporting documents for validation performed by customers, consisting of: IQ/OQ checklists incl. calibration guide and comprehensive unit documentation; parameters: temperature, CO_2, O_2, pressure, depending on unit			
	Digital in PDF format	•	-	7057-0001
	Hard copy inside folder	•	-	7007-0001
Rack	stainless steel	•	-	8012-2053
Rack, reinforced	stainless steel, with fasteners (1 set of 4)	•	-	8012-0605
Rack accessories	fasteners (1 set of 4) for additional security of racks	•	-	8012-2280
RS 485 / RS 422 interface converter	RS 422 cable set and RS 485 / RS 422 interface converter for connection to 10-way plug distributor			
	115 V option model	•	-	8012-0599
	230 V option model	•	-	8012-0589
Shelf, perforated	Stainless steel	•	-	8012-2251

SERVICES

Designation	Description	*	Art.-No.
Calibration services			
Calibration certificate, temperature	Calibration of one (1) test temperature specified by the user in center of chamber, including certificate	05	DL30-0130
	Extension of calibration of one (1) additional test temperature specified by the user in the center of the usable space, including certificate	05	DL30-0102
Temperature measurement, 9 measuring points	Temperature measurement with 9 measuring points with a set value specified by the user, including certificate	05	DL30-0109
Temperature measurement, 18 measuring points	Temperature measurement with 18 measuring points with a set value specified by the user, including certificate	05	DL30-0118

Designation	Description	*	Art.-No.
Temperature measurement, 27 measuring points	Temperature measurement with 27 measuring points with a set value specified by the user, including certificate	05	DL30-0127
Installation services			
Unit commissioning	Connect the unit to the customer-side connections (electricity, water, wastewater, gas), basic functions check, brief operating instructions. (excl.: unpacking, setup, controller instructions, programming, installation work)	05	DL10-0170
Unit instructions	Instruction regarding operating principle and basic functions of the unit, operation of the control electronics including programming	05	DL10-0560
Maintenance contracts			
BRONZE 3-year maintenance contract	Maintenance service as contractually agreed, visual inspection of mechanical and electrical components, check of control response, 20% discount on spare parts	05	DL20-0710
GOLD 3-year maintenance contract	Maintenance service as contractually agreed, visual inspection of mechanical and electrical components, check of control response, 20% discount on spare parts, testing of all key functions, replacement of wear parts, calibration of one temperature/humidity/pressure value, including certificate	05	DL20-0930
SILVER 3-year maintenance contract	Maintenance service as contractually agreed, visual inspection of mechanical and electrical components, check of control response, 20% discount on spare parts, testing of all key functions, calibration of one test temperature specified by the user in the center of the usable space, without certificate	05	DL20-0830
Maintenance services			
Leakage test	Testing and logging of the leak-tightness of systems containing hydrofluorocarbons in accordance with Regulation EC842/2006, incl. test book	05	DL00-0034
Maintenance	One-off maintenance service in accordance with maintenance schedule. Visual inspection of mechanical and electrical components, testing of all key functions. Calibration of a test temperature specified by the user in center of usable space without certificate	05	DL20-0607
Validation services			
Execution of IQ/OQ	Execution of IQ/OQ in accordance with qualification folder	05	DL41-0200
Execution of IQ/OQ/PQ	Execution of IQ/OQ/PQ in accordance with qualification folder	05	DL44-0500
Warranty service			
1-year warranty extension	The warranty is extended by 1 year from the delivery date, wear parts are excluded	05	DL50-0040

NOTES

01 Condensation may occur in the area around the access port. Access ports may be placed in custom locations for an additional charge.

05 Quoted prices do not include travel costs. Please refer to the chapter on BINDER Service for travel costs for your region. Quoted prices for services performed in Switzerland do not include a country-specific added fee (available on request).

BINDER GmbH
Tuttlingen, Germany
TEL +49 7462 2005 0
info@binder-world.com
www.binder-world.com

BINDER Inc.
Bohemia, NY, USA
TEL +1 631 224 4340
usa@binder-world.com
www.binder-world.us

BINDER Environmental Testing Equipment (Shanghai) Co., Ltd.
Shanghai, P.R. China
TEL +86 21 685 808 25
china@binder-world.com
www.binder-world.com