Model MKF 240 | Dynamic climate chambers for rapid temperature changes with humidity control

A BINDER MKF series environmental simulation chamber is ideally suited for any cold and heat testing based on current temperature and climate testing methods according to DIN and IEC standards. The comprehensive standard equipment for this environmental simulation chamber ensures ease of operation.

BENEFITS

- Homogeneous climate conditions thanks to APT.line™ technology
- Automatic water and wastewater management
- Pressure humidification with fast response times
- Comprehensive programming and data acquisition
- Large heated viewing window



Model 240



Model 240

IMPORTANT FEATURES

- Temperature range: -40 °C to +180 °C
- Humidity range: 10 % to 98 % RH
- Integrated water-storage tank, 20 liters
- 4 zero-voltage relay contacts
- APT.line™ preheating chamber technology
- Programmable condensation protection for test material
- Heated viewing window with LED interior lighting
- Humidity regulation with capacitative humidity sensor and vapor humidification
- BINDER Multi Management Software APT-COM™ 4 Basic Edition
- Troubleshooting system with visual and audible alarms
- Intuitive touchscreen controller with time-segment and real-time programming
- Internal data logger, measured values can be read out in open format via USB
- Access port with silicone plug: 50 mm, left
- Class 2 independent adjustable temperature safety device (DIN 12880) with visual alarm
- 4 castors, two with brakes
- Computer interface: Ethernet
- Adjustable ramp function
- Integrated chart recorder
- Real-time clock
- Door heating
- Alarm notification in the event of insufficient water in fresh water tank
- 1 stainless steel rack
- Complete safety connection kit for water supply and drainage, up to 1 m height
- Inner chamber made of stainless steel
- CFC-free refrigerant R-452A
- Cooling with compressor cooling unit

OPTIONAL EQUIPMENT

- APT-COM Multi Management Software – for managing, recording, and documenting unit parameters
- Racks – option of stainless steel racks, depending on test requirements
- Systems for water treatment and compressed air supply
- Services – wide range of services to ensure that the unit functions correctly

ORDERING INFORMATION

Interior volume [L]	Power supply - unit fuse	Plug*	Version	Model version	Art.-No.
Model MKF 240					
228	400 V 3~/N/PE 50 Hz -16,0 A	CEE 16 / 6 H plug 5-pin	Standard	MKF240-400V	9020-0380
	480 V 3~ 60 Hz -16,0 A	CEE 16 / 6 H plug 5-pin	with voltage and frequency converter	MKF240-480V-C	9020-0358

TECHNICAL DATA

Data		
Article Number	9020-0380	9020-0358
Designation	MKF240-400V	MKF240-480V-C
Option model	Standard	with voltage and frequency converter
Performance Data Temperature		
Temperature range	-40...180 °C	-40...180 °C
Temperature uniformity dependent on set value	0.1...1.5 ± K	0.1...1.5 ± K
Temperature fluctuation dependent on set value	0.1...0.5 ± K	0.1...0.5 ± K
Average heating-up rate according to IEC 60068-3-5 between -40°C and 180°C	5.0 K/min	5.0 K/min
Average cooling down time according to IEC 60068-3-5 between 180°C and -40°C	5.0 K/min	5.0 K/min
Cooling down time from 180°C to -40°C	120 min	120 min
Performance Data Climate		
Temperature range with humidity	10...95 °C	10...95 °C
Humidity range	10...98 % RH	10...98 % RH
Temperature fluctuation with humidity dependent on set value	0.1...1.3 ± K	0.1...1.3 ± K
Humidity fluctuation with humidity dependent on set value	≤2,5 ± % r.F.	≤2,5 ± % r.F.
Max. heat compensation at 25°C and 90% RH	400 W	400 W
Electrical data		
Rated Voltage	400 V	480 V
Power frequency	50 Hz	60 Hz
Nominal power	6,8 kW	6,8 kW
Unit fuse	16,0 A	16,0 A
Phase (Nominal voltage)	3~/N/PE	3~
Dimensions and weights		
Interior volume	228 L	228 L
Net weight of the unit (empty)	360 kg	360 kg
Load per rack	30 kg	30 kg
Permitted load	70 kg	70 kg

Wall clearance back	300 mm	300 mm
Wall clearance sidewise	200 mm	200 mm
Housing dimensions not incl. fittings and connections		
Width net	1,115 mm	1,115 mm
Height net	1,715 mm	1,715 mm
Depth net	925 mm	925 mm
Internal Dimensions		
Interior width	735 mm	735 mm
Interior height	700 mm	700 mm
Interior depth	443 mm	443 mm
Unit doors	1	1
Environment-specific data		
Sound-pressure level	65 dB(A)	67 dB(A)
Energy consumption at 25°C and 60% RH	1,500 Wh/h	1,500 Wh/h
Fixtures		
Number of shelves (std./max.)	1/6	1/6

All technical data is specified for unloaded units with standard equipment at an ambient temperature of +22 °C ±3 °C and a power supply voltage fluctuation of ±10 %. The temperature data is determined in accordance to BINDER factory standard following DIN 12880, observing the recommended wall clearances of 10 % of the height, width, and depth of the inner chamber. Technical data refers to 100 % fan speed. All indications are average values, typical for units produced in series. We reserve the right to change technical specifications at any time.

DIMENSIONS Incl. fittings and connections [mm]

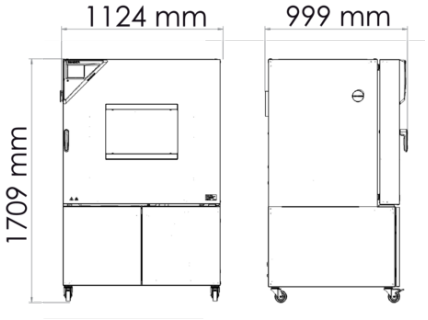

DIAGRAMS

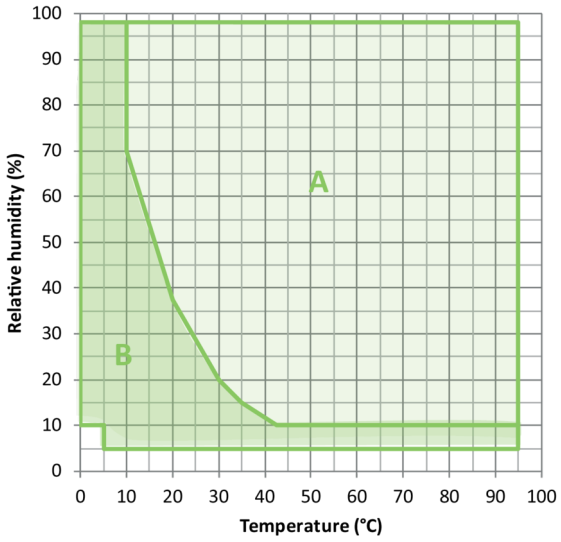

A: Standard Climate range
B: Expanded range with controlled dry-air purge

Climate chart

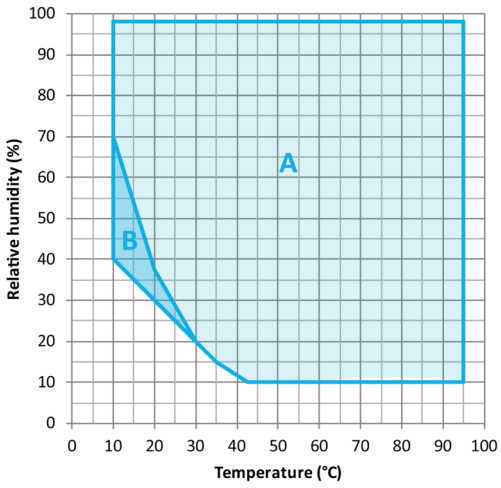

A: Standard Climate range
B: Time-limited operation (max. 24 hours)

Climate chart

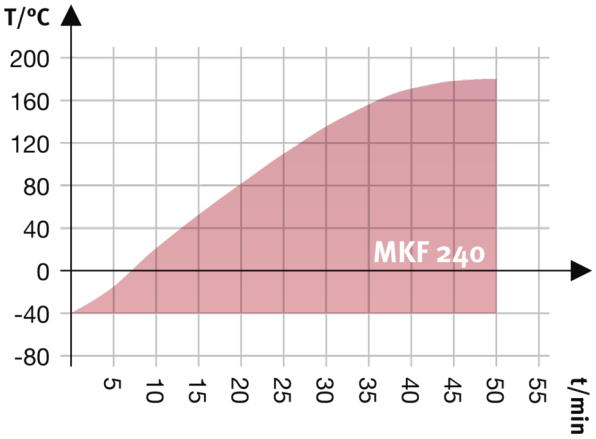

Heating up rate

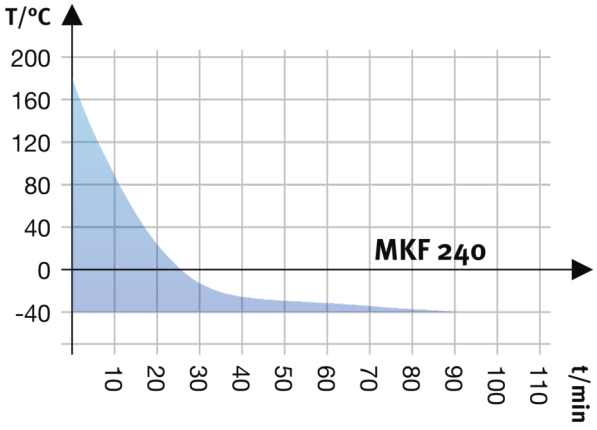

Cooling down rate

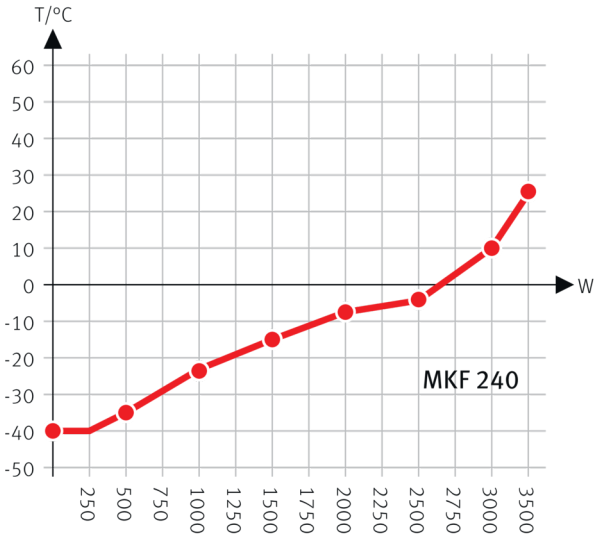

Heat compensation with a set value of -40°C

Heat compensation chart

OPTIONS

Designation	Description	MKF 240	*	Art.-No.
Access port with silicone plug	left			
	30 mm	•	01	8012-1323
	50 mm	•	01	8012-1329
	80 mm	•	01	8012-1335
	100 mm	•	01	8012-1543
	125 mm	•	01	8012-1352
	right			
	30 mm	•	01	8012-1320
	50 mm	•	01	8012-1326
	80 mm	•	01	8012-1332
	100 mm	•	01	8012-1540
	125 mm	•	01	8012-1349
	top			
	80 mm	•	01	8012-1537
	100 mm	•	01	8012-1531
	125 mm	•	01	8012-1534
Analog output 4-20 mA	for temperature and humidity values (output not adjustable)	•	-	8012-1085

Designation	Description	MKF 240	*	Art.-No.
Calibration certificate, expanded	for temperature and humidity; for extending the measurement in center of chamber to include another test value	•	-	8012-1194
Calibration certificate, temperature	temperature measurement incl. certificate, 9 measuring points at specified temperature	•	-	8012-1568
	temperature measurement incl. certificate, 15- 18 measuring points at specified temperature	•	-	8012-1589
	temperature measurement incl. certificate and 27 measuring points at specified temperature	•	-	8012-1609
Calibration certificate, temperature and humidity	Measurement in center of chamber at 25°C / 60% RH or at specified test values	•	-	8012-1188
	temperature (according to DIN12880) and humidity measurement incl. certificate, 27 temperature measuring points and 1 humidity measuring point, at 25 °C / 60 % RH or at specified values	•	-	8012-1615
Compressed air connection	for the connection to an existing pressurized air network	•	-	8012-1787
Door lock	lockable door handle	•	-	8012-1862
Dry-air purge	controlled, incl. connection; suitable for the simulation of current automobile industry standards	•	-	8012-1869
Notch-type access port	notch-type access port in door, 100 x 35 mm	•	-	8012-1856
Pt 100 temperature sensor	additional flexible Pt 100, interior, for displaying the temperature on the unit display	•	-	8012-1094
RS 485 interface, 2-wire	Additional serial interface can be used parallel to Ethernet, for Multi Management Software APT-COM™	•	-	8012-1769
Temperature safety device class 2	with visual alarm (DIN 12880)	•	-	8012-1864
Water circuit	allows condensed water to be reused	•	-	8012-1512
Water cooling	for reduced heat loss to ambient air	•	-	8012-0842

ACCESSORIES

Designation	Description	MKF 240	*	Art.-No.
APT-COM™ 4 GLP-Edition	for working under GLP-compliant conditions. Measured values are documented in a tamper-proof way in line with the requirements of FDA Regulation 21 CFR 11.			
	version 4, GLP edition	•	-	9053-0042
APT-COM™ 4 PROFESSIONAL-Edition	convenient unit and user management built on the BASIC edition. Suitable for networking up to 100 units.			
	version 4, PROFESSIONAL edition	•	-	9053-0040
BINDER PURE AQUA SERVICE	System for preparation or complete desalination of tap water, complete set containing PURE AQUA 300 single-use cartridge, measuring device, and all necessary connecting parts	•	-	8012-0759
BINDER PURE AQUA SERVICE, accessories	Single-use, replacement cartridge for BINDER PURE AQUA System	•	-	6011-0165

Designation	Description	MKF 240	*	Art.-No.
pH-neutral detergent	concentrated, for gentle remove of residual contaminants; 1 kg	•	-	8012-2250
Qualification documents	IQ/OQ/PQ documents – supporting documents for validation performed by customers, according to customer requirements, PQ section added to qualification folder IQ/OQ; parameters: temperature and humidity values			
	Digital in PDF format	•	-	7057-0006
	Hard copy inside folder	•	-	7007-0006
	IQ/OQ documents – supporting documents for validation performed by customers, consisting of: IQ/OQ checklists incl. calibration guide and comprehensive unit documentation; parameters: temperature and humidity values			
	Digital in PDF format	•	-	7057-0002
	Hard copy inside folder	•	-	7007-0002
Rack	stainless steel	•	-	8012-2053
Rack, reinforced	stainless steel, with fasteners (1 set of 4)	•	-	8012-0605
Rack accessories	fasteners (1 set of 4) for additional security of racks	•	-	8012-2280
RS 485 / RS 422 interface converter	RS 422 cable set and RS 485 / RS 422 interface converter for connection to 10-way plug distributor			
	115 V option model	•	-	8012-0599
	230 V option model	•	-	8012-0589
Shelf, perforated	Stainless steel	•	-	8012-2251

SERVICES

Designation	Description	*	Art.-No.
Calibration services			
Temperature and humidity calibration	Expansion –Temperature and humidity calibration with 1 measuring point in center of chamber with 1 specified pair of values, including certificate	05	DL30-0302
	Temperature and humidity calibration with 1 measuring point in center of chamber with 1 specified pair of values, including certificate	05	DL30-0330
Temperature and humidity measurement, 9-1 measuring points	Temperature measurement with 9 temperature measuring points and 1 humidity measuring point in center of chamber with a pair of values specified by the user, including certificate	05	DL30-0309
Temperature and humidity measurement, 18-1 measuring points	Temperature measurement with 18 temperature measuring points and 1 humidity measuring point in center of chamber with a pair of values specified by the user, including certificate	05	DL30-0318
Temperature and humidity measurement, 27-1 measuring points	Temperature measurement with 27 temperature measuring points and 1 humidity measuring point in center of chamber with a pair of values specified by the user, including certificate	05	DL30-0327
Temperature and humidity measurement according to DIN12880	Temperature measurement in accordance with DIN 12880 with 27 temperature measuring points and 1 humidity measuring point in center of chamber with a pair of values specified by the user, including certificate	05	DL30-0427

Designation	Description	*	Art.-No.
Installation services			
Unit commissioning	Connect the unit to the customer-side connections (electricity, water, wastewater, gas), basic functions check, brief operating instructions. (excl.: unpacking, setup, controller instructions, programming, installation work)	05	DL10-0180
Unit instructions	Instruction regarding operating principle and basic functions of the unit, operation of the control electronics including programming	05	DL10-0560
Maintenance contracts			
BRONZE 3-year maintenance contract	Maintenance service as contractually agreed, visual inspection of mechanical and electrical components, check of control response, 20% discount on spare parts	05	DL20-0710
GOLD 3-year maintenance contract	Maintenance service as contractually agreed, visual inspection of mechanical and electrical components, check of control response, 20% discount on spare parts, testing of all key functions, replacement of wear parts, calibration of one test temperature specified by the user in the center of the usable space, including certificate	05	DL20-0935
SILVER 3-year maintenance contract	Maintenance service as contractually agreed, visual inspection of mechanical and electrical components, check of control response, 20% discount on spare parts, testing of all key functions, calibration of one test temperature specified by the user in the center of the usable space, without certificate	05	DL20-0835
Maintenance services			
Leakage test	Testing and logging of the leak-tightness of systems containing hydrofluorocarbons in accordance with Regulation EC842/2006, incl. test book	05	DL00-0034
Maintenance	One-off maintenance service in accordance with maintenance schedule. Visual inspection of mechanical and electrical components, testing of all key functions. Calibration of a test temperature specified by the user in center of usable space without certificate	05	DL20-0610
Validation services			
Execution of IQ/OQ	Execution of IQ/OQ in accordance with qualification folder	05	DL42-0300
Execution of IQ/OQ/PQ	Execution of IQ/OQ/PQ in accordance with qualification folder	05	DL44-0500
Warranty service			
1-year warranty extension	The warranty is extended by 1 year from the delivery date, wear parts are excluded	05	DL50-0040

NOTES

01 Condensation may occur in the area around the access port. Access ports may be placed in custom locations for an additional charge.

05 Quoted prices do not include travel costs. Please refer to the chapter on BINDER Service for travel costs for your region. Quoted prices for services performed in Switzerland do not include a country-specific added fee (available on request).

BINDER GmbH
Tuttlingen, Germany
TEL +49 7462 2005 0
info@binder-world.com
www.binder-world.com

BINDER Inc.
Bohemia, NY, USA
TEL +1 631 224 4340
usa@binder-world.com
www.binder-world.us

BINDER Environmental Testing Equipment (Shanghai) Co., Ltd.
Shanghai, P.R. China
TEL +86 21 685 808 25
china@binder-world.com
www.binder-world.com