Model KBF-S ECO 400 | Constant climate chambers with environmentally friendly thermoelectric cooling

Thanks to thermoelectric cooling technology with patented heat dissipation, the new KBF-S ECO climatic chamber is one of the most energy-efficient constant climate chambers on the market. The thermoelectric cooling technology means the KBF-S ECO series is also very quiet during operation.

BENEFITS

- Safe thanks to standard-compliant testing according to the ICH Q1A guideline, even with full load.
- Reliable thanks to failsafe operation without compromise.
- Smart, as a wide range of accessories makes it highly compatible for adaptation to specific customer requirements.
- Economical, as energy consumption is minimal thanks to optimized thermoelectric cooling.



Model 400



Model 400

IMPORTANT FEATURES

- Temperature range: 0 °C to +70 °C (max. 26 °C under ambient temperature)
- Humidity range: 10% to 80% RH
- APT.line™ preheating chamber technology
- Independent water supply via tank
- LCD to display temperature and humidity along with additional information and alarms
- Internal data logger, measured values can be read out in open format via USB
- Unit self-test for comprehensive status analysis
- Inner chamber made completely of stainless steel
- 2 stainless steel racks
- Access port with silicone plug Ø 30 mm, left
- Computer interface: Ethernet

ORDERING INFORMATION

Interior volume [L]	Power supply - unit fuse	Plug*	Version	Model version	Art.-No.
Model KBF-S ECO 400					
400	200...230 V 1~ 50/60 Hz -16,0 A	CEE 7/7	Standard	KBFSECO400-230V	9020-0463
	100...120 V 1~ 50/60 Hz -16,0 A	NEMA 5-20	Standard	KBFSECO400UL-120V	9020-0464

TECHNICAL DATA

Data		
Article Number	9020-0463	9020-0464
Designation	KBFSECO400-230V	KBFSECO400UL-120V
Option model	Standard	Standard
Performance Data Temperature		
Temperature range	(max. 26 °C under ambient temperature) 0...70 °C	(max. 26 °C under ambient temperature) 0...70 °C
Max. heat compensation at 40°C	300 W	300 W
Performance Data Climate		
Temperature range with humidity	(max. 26 °C under ambient temperature) 5...70 °C	(max. 26 °C under ambient temperature) 5...70 °C
Humidity range	10...80 % RH	10...80 % RH
Temperature uniformity at 25°C and 60% RH	0.1 ± K	0.1 ± K
Temperature uniformity at 40°C and 75% RH	0.5 ± K	0.5 ± K
Temperature fluctuation at 25°C and 60% RH	0.1 ± K	0.1 ± K
Temperature fluctuation at 40°C and 75% RH	0.1 ± K	0.1 ± K
Humidity fluctuation at 25°C and 60% RH	0.3 ± % RH	0.3 ± % RH
Humidity fluctuation at 40°C and 75% RH	0.3 ± % RH	0.3 ± % RH
Recovery time after door was opened for 30 s at 25°C and 60% RH	6 min	6 min
Recovery time after door was opened for 30 s at 40°C and 75% RH	15 min	15 min
Electrical data		
Rated Voltage	200...230 V	100...120 V
Power frequency	50/60 Hz	50/60 Hz
Nominal power	1,1 kW	1,1 kW
Unit fuse	16,0 A	16,0 A
Phase (Nominal voltage)	1~	1~
Dimensions and weights		
Interior volume	400 L	400 L
Net weight of the unit (empty)	192 kg	192 kg
Load per rack	30 kg	30 kg
Permitted load	120 kg	120 kg

Wall clearance back	100 mm	100 mm
Wall clearance sidewise	180 mm	180 mm
Housing dimensions not incl. fittings and connections		
Width net	925 mm	925 mm
Height net	1,946 mm	1,946 mm
Depth net	796 mm	796 mm
Internal Dimensions		
Interior width	650 mm	650 mm
Interior height	1,268 mm	1,268 mm
Interior depth	485 mm	485 mm
Unit doors	1	1
Environment-specific data		
Sound-pressure level	45 dB(A)	45 dB(A)
Energy consumption at 25°C and 60% RH	60 Wh/h	60 Wh/h
Energy consumption at 40°C and 75% RH	70 Wh/h	70 Wh/h
Fixtures		
Number of shelves (std./max.)	2/15	2/15

All technical data is specified for unloaded units with standard equipment at an ambient temperature of +22 °C ±3 °C and a power supply voltage fluctuation of ±10 %. The temperature data is determined to BINDER factory standard following DIN 12880, observing the recommended wall clearances of 10 % of the height, width, and depth of the inner chamber. Technical data refers to 100 % fan speed. All indications are average values, typical for units produced in series. We reserve the right to change technical specifications at any time.

For model KBF-S ECO 240, temperature differences are possible up to 28 °C below ambient temperature; for models KBF-S ECO 400, KBF-S ECO 720 and KBF-S ECO 1020, temperature differences are possible up to 24 °C below ambient temperature.
The lowest operating temperature for all units is 0 °C irrespective of the ambient temperature.

DIMENSIONS Incl. fittings and connections [mm]

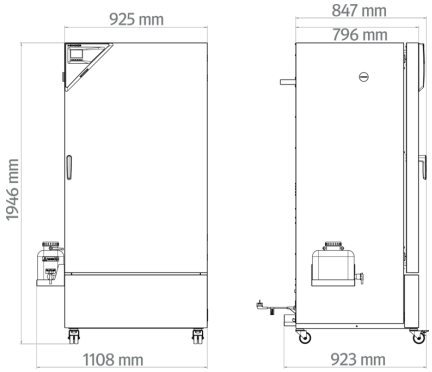

DIAGRAMS

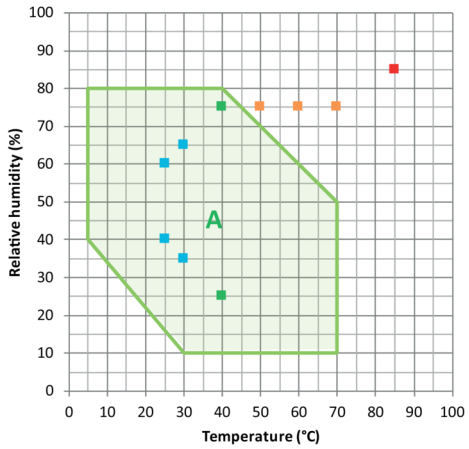

ICH Long term stability testing
Accelerated stability testing
ICH Stress testing
Industrial THB testing (85/85)

A: Guaranteed condensation-free range

Climate chart

OPTIONS

Designation	Description	KBF-S ECO 400	*	Art.-No.
Access port with silicone plug	left			
	30 mm	•	01	8012-2072
	50 mm	•	01	8012-2079
	100 mm	•	01	8012-2077
	right			
	30 mm	•	01	8012-2071
	50 mm	•	01	8012-2078
	100 mm	•	01	8012-2076
	top			
	30 mm	•	01	8012-2073
	50 mm	•	01	8012-2074
	100 mm	•	01	8012-2075
Calibration certificate, expanded	for temperature and humidity; for extending the measurement in center of chamber to include another test value	•	-	8012-2066
Calibration certificate, temperature	temperature measurement incl. certificate, 9 measuring points at specified temperature	•	-	8012-2067

Designation	Description	KBF-S ECO 400	*	Art.-No.
	temperature measurement incl. certificate, 15- 18 measuring points at specified temperature	•	-	8012-2068
	temperature measurement incl. certificate and 27 measuring points at specified temperature	•	-	8012-2069
Calibration certificate, temperature and humidity	Measurement in center of chamber at 25°C / 60% RH or at specified test values	•	-	8012-2065
	temperature (according to DIN12880) and humidity measurement incl. certificate, 27 temperature measuring points and 1 humidity measuring point, at 25 °C / 60 % RH or at specified values	•	-	8012-2070
Door lock	lockable door handle	•	-	8012-2086

ACCESSORIES

Designation	Description	KBF-S ECO 400	*	Art.-No.
APT-COM™ 4 BASIC-Edition	for simple logging and documentation requirements with up to 5 networked units.			
	version 4, BASIC edition	•	-	9053-0039
APT-COM™ 4 GLP-Edition	for working under GLP-compliant conditions. Measured values are documented in a tamper-proof way in line with the requirements of FDA Regulation 21 CFR 11.			
	version 4, GLP edition	•	-	9053-0042
APT-COM™ 4 PROFESSIONAL-Edition	convenient unit and user management built on the BASIC edition. Suitable for networking up to 100 units.			
	version 4, PROFESSIONAL edition	•	-	9053-0040
BINDER PURE AQUA SERVICE	System for preparation or complete desalination of tap water, complete set containing PURE AQUA 300 single-use cartridge, measuring device, and all necessary connecting parts	•	-	8012-0759
BINDER PURE AQUA SERVICE, accessories	Single-use, replacement cartridge for BINDER PURE AQUA System	•	-	6011-0165
LED light bars	Basic set consisting of 2 pieces, attachment material, control unit for max. 4 light strips, 100-240 V, 50/60 Hz			
	Basic set 300, length 30 cm	•	-	8012-1107
	Basic set 500, length 50 cm	•	-	8012-1108
	Expansion set consisting of 2 pieces, attachment material: clips. For expanding the basic set of light bars			
	Expansion set 300, length 30 cm	•	-	8012-1716
	Expansion set 500, length 50 cm	•	-	8012-1717
pH-neutral detergent	concentrated, for gentle remove of residual contaminants; 1 kg	•	-	8012-2250

Designation	Description	KBF-S ECO 400	*	Art.-No.
Qualification documents	IQ/OQ/PQ documents – supporting documents for validation performed by customers, according to customer requirements, PQ section added to qualification folder IQ/OQ; parameters: temperature and humidity values			
	Digital in PDF format	•	-	7057-0006
	Hard copy inside folder	•	-	7007-0006
	IQ/OQ documents – supporting documents for validation performed by customers, consisting of: IQ/OQ checklists incl. calibration guide and comprehensive unit documentation; parameters: temperature and humidity values			
	Digital in PDF format	•	-	7057-0002
	Hard copy inside folder	•	-	7007-0002
Rack	stainless steel	•	-	8012-2050
Rack, reinforced	stainless steel, with fasteners (1 set of 4)	•	-	8012-0638
Rack accessories	fasteners (1 set of 4) for additional security of racks	•	-	8012-2280
Shelf, perforated	Stainless steel	•	-	8012-2163

SERVICES

Designation	Description	*	Art.-No.
Calibration services			
Temperature and humidity calibration	Expansion –Temperature and humidity calibration with 1 measuring point in center of chamber with 1 specified pair of values, including certificate	05	DL30-0302
	Temperature and humidity calibration with 1 measuring point in center of chamber with 1 specified pair of values, including certificate	05	DL30-0310
Temperature and humidity measurement, 9-1 measuring points	Temperature measurement with 9 temperature measuring points and 1 humidity measuring point in center of chamber with a pair of values specified by the user, including certificate	05	DL30-0309
Temperature and humidity measurement, 18-1 measuring points	Temperature measurement with 18 temperature measuring points and 1 humidity measuring point in center of chamber with a pair of values specified by the user, including certificate	05	DL30-0318
Temperature and humidity measurement, 27-1 measuring points	Temperature measurement with 27 temperature measuring points and 1 humidity measuring point in center of chamber with a pair of values specified by the user, including certificate	05	DL30-0327
Temperature and humidity measurement according to DIN12880	Temperature measurement in accordance with DIN 12880 with 27 temperature measuring points and 1 humidity measuring point in center of chamber with a pair of values specified by the user, including certificate	05	DL30-0427
Installation services			
Unit commissioning	Connect the unit to the customer-side connections (electricity, water, wastewater, gas), basic functions check, brief operating instructions. (excl.: unpacking, setup, controller instructions, programming, installation work)	05	DL10-0170
Unit instructions	Instruction regarding operating principle and basic functions of the unit, operation of the control electronics including programming	05	DL10-0550

Designation	Description	*	Art.-No.
Maintenance contracts			
BRONZE 3-year maintenance contract	Maintenance service as contractually agreed, visual inspection of mechanical and electrical components, check of control response, 20% discount on spare parts	05	DL20-0710
GOLD 3-year maintenance contract	Maintenance service as contractually agreed, visual inspection of mechanical and electrical components, check of control response, 20% discount on spare parts, testing of all key functions, replacement of wear parts, calibration of one test temperature specified by the user in the center of the usable space, including certificate	05	DL20-0925
SILVER 3-year maintenance contract	Maintenance service as contractually agreed, visual inspection of mechanical and electrical components, check of control response, 20% discount on spare parts, testing of all key functions, calibration of one test temperature specified by the user in the center of the usable space, without certificate	05	DL20-0825
Maintenance services			
Maintenance	One-off maintenance service in accordance with maintenance schedule. Visual inspection of mechanical and electrical components, testing of all key functions. Calibration of a test temperature specified by the user in center of usable space without certificate	05	DL20-0605
Validation services			
Execution of IQ/OQ	Execution of IQ/OQ in accordance with qualification folder	05	DL42-0300
Execution of IQ/OQ/PQ	Execution of IQ/OQ/PQ in accordance with qualification folder	05	DL44-0500
Warranty service			
1-year warranty extension	The warranty is extended by 1 year from the delivery date, wear parts are excluded	05	DL50-0030

NOTES

01 Condensation may occur in the area around the access port. Access ports may be placed in custom locations for an additional charge.

05 Quoted prices do not include travel costs. Please refer to the chapter on BINDER Service for travel costs for your region. Quoted prices for services performed in Switzerland do not include a country-specific added fee (available on request).

BINDER GmbH
Tuttlingen, Germany
TEL +49 7462 2005 0
info@binder-world.com
www.binder-world.com

BINDER Inc.
Bohemia, NY, USA
TEL +1 631 224 4340
usa@binder-world.com
www.binder-world.us

BINDER Environmental Testing Equipment (Shanghai) Co., Ltd.
Shanghai, P.R. China
TEL +86 21 685 808 25
china@binder-world.com
www.binder-world.com