# Model MK 56 | Dynamic climate chambers for rapid temperature changes

**The BINDER MK series chamber is suitable for all heat and cold tests between -40 °C and +180 °C. The MK is a clever alternative to complex individual solutions for cyclical temperature tests.**

## BENEFITS

- Homogeneous climate conditions thanks to APT.line™ technology
- Comprehensive programming and data acquisition
- Large heated viewing window



Model 56



Model 56

## IMPORTANT FEATURES

- Temperature range: -40 °C to +180 °C
- APT.line™ preheating chamber technology
- Programmable condensation protection for test material
- Heated viewing window with LED interior lighting
- BINDER Multi Management Software APT-COM™ Basic Edition
- Troubleshooting system with visual and audible alarms
- Intuitive touchscreen controller with time-segment and real-time programming
- Internal data logger, measured values can be read out in open format via USB
- Unit self-test for comprehensive status analysis
- Access port with silicone plug, 50 mm, left
- Class 2 independent adjustable temperature safety device (DIN 12880) with visual alarm
- 4 castors, two with brakes
- Computer interface: Ethernet
- Adjustable ramp function
- Integrated chart recorder
- Real-time clock
- 1 stainless steel rack
- Inner chamber made of stainless steel
- CFC-free refrigerant R-452A
- Cooling with compressor cooling unit

## OPTIONAL EQUIPMENT

- APT-COM Multi Management Software – for managing, recording, and documenting unit parameters
- Racks – option of stainless steel racks, depending on test requirements
- Compressed air supply system
- Services – wide range of services to ensure that the unit functions correctly

## ORDERING INFORMATION

| Interior volume [L] | Power supply - unit fuse | Plug* | Version | Model version | Art.-No. |
|---|---|---|---|---|---|
| **Model MK 56** | | | | | |
| 60 | 230 V 1~ 50 Hz -16,0 A | CEE 7/7 | Standard | MK056-230V | 9020-0374 |
| | 240 V 1~ 60 Hz -16,0 A | NEMA 6-20 | Standard | MK056-240V | 9020-0388 |

## TECHNICAL DATA

| | | |
|---|---|---|
| **Data** | | |
| Article Number | 9020-0374 | 9020-0388 |
| Designation | MK056-230V | MK056-240V |
| Option model | Standard | Standard |
| **Performance Data Temperature** | | |
| Temperature range | -40...180 °C | -40...180 °C |
| Temperature uniformity dependent on set value | 0.5...1.5 ± K | 0.5...1.5 ± K |
| Temperature fluctuation dependent on set value | 0.1...0.5 ± K | 0.1...0.5 ± K |
| Average heating-up rate according to IEC 60068-3-5 between -40°C and 180°C | 5.0 K/min | 5.0 K/min |
| Average cooling down time according to IEC 60068-3-5 between 180°C and -40°C | 5.0 K/min | 5.0 K/min |
| Cooling down time from 180°C to -40°C | 90 min | 90 min |
| **Electrical data** | | |
| Rated Voltage | 230 V | 240 V |
| Power frequency | 50 Hz | 60 Hz |
| Nominal power | 2,8 kW | 2,8 kW |
| Unit fuse | 16,0 A | 16,0 A |
| Phase (Nominal voltage) | 1~ | 1~ |
| **Dimensions and weights** | | |
| Interior volume | 60 L | 60 L |
| Net weight of the unit (empty) | 165 kg | 165 kg |
| Load per rack | 15 kg | 15 kg |
| Permitted load | 60 kg | 60 kg |
| Wall clearance back | 300 mm | 300 mm |
| Wall clearance sidewise | 200 mm | 200 mm |
| **Housing dimensions not incl. fittings and connections** | | |
| Width net | 720 mm | 720 mm |
| Height net | 1,445 mm | 1,445 mm |
| Depth net | 778 mm | 778 mm |
| **Internal Dimensions** | | |

| | | |
|---|---|---|
| Interior width | 400 mm | 400 mm |
| Interior height | 420 mm | 420 mm |
| Interior depth | 350 mm | 350 mm |
| Unit doors | 1 | 1 |
| **Environment-specific data** | | |
| Sound-pressure level | 59 dB(A) | 59 dB(A) |
| Energy consumption at 20°C | 600 Wh/h | 600 Wh/h |
| **Fixtures** | | |
| Number of shelves (std./max.) | 1/4 | 1/4 |

All technical data is specified for unloaded units with standard equipment at an ambient temperature of +22 °C ±3 °C and a power supply voltage fluctuation of ±10 %. The temperature data is determined in accordance to BINDER factory standard following DIN 12880, observing the recommended wall clearances of 10 % of the height, width, and depth of the inner chamber. Technical data refers to 100 % fan speed. All indications are average values, typical for units produced in series. We reserve the right to change technical specifications at any time.

## DIMENSIONS Incl. fittings and connections [mm]

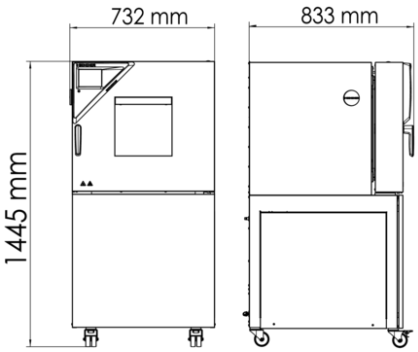

## DIAGRAMS

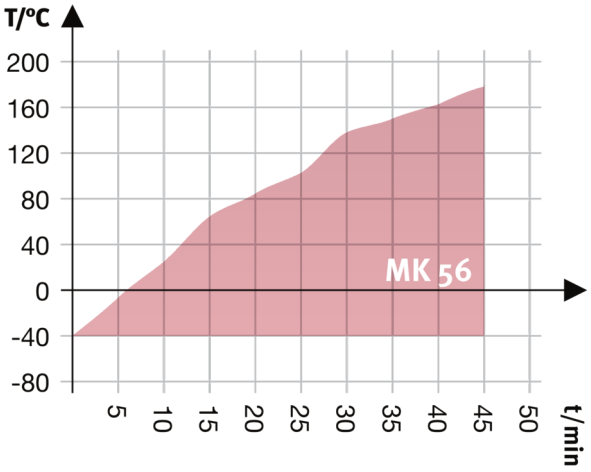


Heating up rate

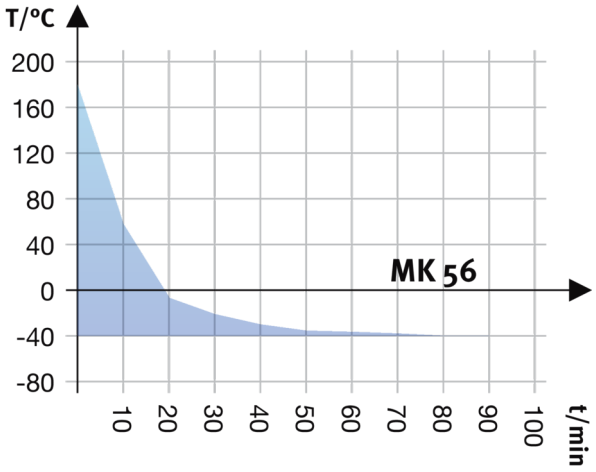


Cooling down rate

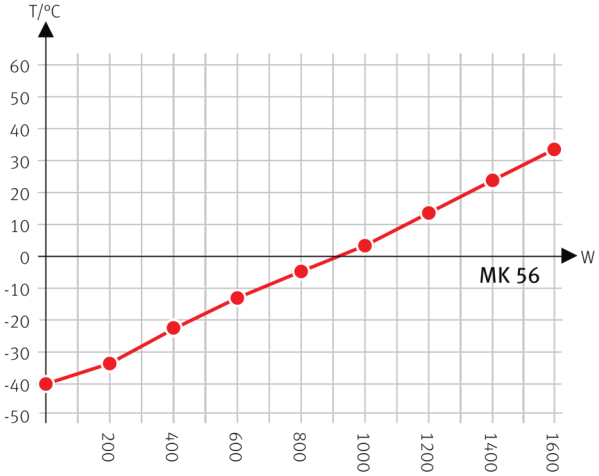


Heat compensation with a set value of -40°C

Heat compensation chart

## OPTIONS

| Designation | Description | MK 56 | * | Art.-No. |
|---|---|---|---|---|
| Access port with silicone plug | left | | | |
| | 30 mm | • | 01 | 8012-1322 |
| | 50 mm | • | 01 | 8012-1328 |
| | 80 mm | • | 01 | 8012-1334 |
| | right | | | |
| | 30 mm | • | 01 | 8012-1319 |
| | 50 mm | • | 01 | 8012-1325 |
| | 80 mm | • | 01 | 8012-1331 |

| Designation | Description | MK 56 | * | Art.-No. |
|---|---|---|---|---|
| | top | | | |
| | 80 mm | • | 01 | 8012-1536 |
| Analog output 4-20 mA | for temperature values (output not adjustable) | • | - | 8012-1084 |
| Calibration certificate, expanded | for temperature; for extending the measurement in center of chamber to include another test temperature | • | - | 8012-1124 |
| Calibration certificate, temperature | for temperature, measurement in center of chamber at specified temperature | • | - | 8012-1143 |
| | temperature measurement incl. certificate, 9 measuring points at specified temperature | • | - | 8012-1560 |
| | temperature measurement incl. certificate, 15- 18 measuring points at specified temperature | • | - | 8012-1581 |
| | temperature measurement incl. certificate and 27 measuring points at specified temperature | • | - | 8012-1602 |
| Compressed air connection | for the connection to an existing pressurized air network | • | - | 8012-1795 |
| Door lock | lockable door handle | • | - | 8012-1782 |
| Dry-air purge | uncontrolled, incl. connection; for preventing condensation | • | - | 8012-1806 |
| Pt 100 temperature sensor | additional flexible Pt 100, interior, for displaying the temperature on the unit display | • | - | 8012-1093 |
| RS 485 interface, 2-wire | Additional serial interface can be used parallel to Ethernet, for Multi Management Software APT-COM™ | • | - | 8012-1768 |
| Temperature safety device class 2 | with visual alarm (DIN 12880) | • | - | 8012-1792 |
| Water cooling | for reduced heat loss to ambient air | • | - | 8012-1815 |
| Zero voltage relay contacts | for controlling 3 relay contacts via program regulators, accessible via 6-pin DIN socket (max. 24 V - 2.5 A) | • | - | 8012-1095 |

## ACCESSORIES

| Designation | Description | MK 56 | * | Art.-No. |
|---|---|---|---|---|
| APT-COM™ 4 GLP-Edition | for working under GLP-compliant conditions. Measured values are documented in a tamper-proof way in line with the requirements of FDA Regulation 21 CFR 11. | | | |
| | version 4, GLP edition | • | - | 9053-0042 |
| APT-COM™ 4 PROFESSIONAL-Edition | convenient unit and user management built on the BASIC edition. Suitable for networking up to 100 units. | | | |
| | version 4, PROFESSIONAL edition | • | - | 9053-0040 |
| pH-neutral detergent | concentrated, for gentle remove of residual contaminants; 1 kg | • | - | 8012-2250 |
| Qualification documents | IQ/OQ/PQ documents – supporting documents for validation performed by customers, according to customer requirements, PQ section added to qualification folder IQ/OQ; parameters: temperature, $CO_2$, $O_2$ – or pressure, depending on unit | | | |

| Designation | Description | MK 56 | * | Art.-No. |
|---|---|---|---|---|
| | Digital in PDF format | • | - | 7057-0005 |
| | Hard copy inside folder | • | - | 7007-0005 |
| | IQ/OQ documents – supporting documents for validation performed by customers, consisting of: IQ/OQ checklists incl. calibration guide and comprehensive unit documentation; parameters: temperature, $CO_2$, $O_2$, pressure, depending on unit | | | |
| | Digital in PDF format | • | - | 7057-0001 |
| | Hard copy inside folder | • | - | 7007-0001 |
| Rack | max. load per rack 30 kg | | | |
| | stainless steel | • | - | 8012-2085 |
| Rack, reinforced | stainless steel | • | - | 8012-1091 |
| Rack accessories | fasteners (1 set of 4) for additional security of racks | • | - | 8012-2280 |
| RS 485 / RS 422 interface converter | RS 422 cable set and RS 485 / RS 422 interface converter for connection to 10-way plug distributor | | | |
| | 115 V option model | • | - | 8012-0599 |
| | 230 V option model | • | - | 8012-0589 |
| Shelf, perforated | max. load per rack 30 kg | | | |
| | Stainless steel | • | - | 8012-2175 |

## SERVICES

| Designation | Description | * | Art.-No. |
|---|---|---|---|
| **Calibration services** | | | |
| Calibration certificate, temperature | Calibration of one (1) test temperature specified by the user in center of chamber, including certificate | 05 | DL30-0130 |
| | Extension of calibration of one (1) additional test temperature specified by the user in the center of the usable space, including certificate | 05 | DL30-0102 |
| Temperature measurement, 9 measuring points | Temperature measurement with 9 measuring points with a set value specified by the user, including certificate | 05 | DL30-0109 |
| Temperature measurement, 18 measuring points | Temperature measurement with 18 measuring points with a set value specified by the user, including certificate | 05 | DL30-0118 |
| Temperature measurement, 27 measuring points | Temperature measurement with 27 measuring points with a set value specified by the user, including certificate | 05 | DL30-0127 |
| **Installation services** | | | |
| Unit commissioning | Connect the unit to the customer-side connections (electricity, water, wastewater, gas), basic functions check, brief operating instructions. (excl.: unpacking, setup, controller instructions, programming, installation work) | 05 | DL10-0170 |
| Unit instructions | Instruction regarding operating principle and basic functions of the unit, operation of the control electronics including programming | 05 | DL10-0560 |

| Designation | Description | * | Art.-No. |
|---|---|---|---|
| **Maintenance contracts** | | | |
| BRONZE 3-year maintenance contract | Maintenance service as contractually agreed, visual inspection of mechanical and electrical components, check of control response, 20% discount on spare parts | 05 | DL20-0710 |
| GOLD 3-year maintenance contract | Maintenance service as contractually agreed, visual inspection of mechanical and electrical components, check of control response, 20% discount on spare parts, testing of all key functions, replacement of wear parts, calibration of one temperature/humidity/pressure value, including certificate | 05 | DL20-0930 |
| SILVER 3-year maintenance contract | Maintenance service as contractually agreed, visual inspection of mechanical and electrical components, check of control response, 20% discount on spare parts, testing of all key functions, calibration of one test temperature specified by the user in the center of the usable space, without certificate | 05 | DL20-0830 |
| **Maintenance services** | | | |
| Leakage test | Testing and logging of the leak-tightness of systems containing hydrofluorocarbons in accordance with Regulation EC842/2006, incl. test book | 05 | DL00-0034 |
| Maintenance | One-off maintenance service in accordance with maintenance schedule. Visual inspection of mechanical and electrical components, testing of all key functions. Calibration of a test temperature specified by the user in center of usable space without certificate | 05 | DL20-0607 |
| **Validation services** | | | |
| Execution of IQ/OQ | Execution of IQ/OQ in accordance with qualification folder | 05 | DL41-0200 |
| Execution of IQ/OQ/PQ | Execution of IQ/OQ/PQ in accordance with qualification folder | 05 | DL44-0500 |
| **Warranty service** | | | |
| 1-year warranty extension | The warranty is extended by 1 year from the delivery date, wear parts are excluded | 05 | DL50-0040 |

## NOTES

01 Condensation may occur in the area around the access port. Access ports may be placed in custom locations for an additional charge.

05 Quoted prices do not include travel costs. Please refer to the chapter on BINDER Service for travel costs for your region. Quoted prices for services performed in Switzerland do not include a country-specific added fee (available on request).

**BINDER GmbH**
Tuttlingen, Germany
TEL +49 7462 2005 0
info@binder-world.com
www.binder-world.com

**BINDER Inc.**
Bohemia, NY, USA
TEL +1 631 224 4340
usa@binder-world.com
www.binder-world.us

**BINDER Environmental Testing Equipment (Shanghai) Co., Ltd.**
Shanghai, P.R. China
TEL +86 21 685 808 25
china@binder-world.com
www.binder-world.com